# Scotsman®
Ice Systems

# MV1006

Other models in this range:
MV306 - MV426 - MV430
MV456 - MV460 - MV606
MV806

# MV Cube Ice Machines up to 465 Kg

MV 1006 with SB530 (sold separately)

MV1006+SB393
(sold separately)

MV1006+SB530
(sold separately)

CBT42EMCD

MV1006+SB550+Top
(sold separately)

CBT48EAMCD

MV1006+SB948+Top
(sold separately)

CBT52EAMCD

MV1006+SB1025+Top
(sold separately)

MV1006+UBH1100
(sold separately)

MV1006+UBH1600
(sold separately)

MV1006+SIS700
(sold separately)

MV1006+SIS1350
(sold separately)

This product qualifies for the following listings:

## Standard Features

- **"Global Standard" width-** 30" (76.20 cm) wide
- **Auto-Alert indicator lights-** communicate about operating status: a diagnostic LED light guides the troubleshooting process and helps decisions regarding opening a service call.
- **Front-facing Evaporator -** Ice forming process inspection and routine cleaning operations may be accomplished simply removing the front panel.
- **Hand-removable water distribution tube-** routine cleaning has never been so easy!
- **Embedded antimicrobial-** Ag-Ion® antimicrobial is present in selected food-zone components
- **External Components-** All external panel components are crafted for optimal aesthetic appeal through superior fit and finish
- **Reusable air filter** is easily removable from the outside for ease of cleaning (in air-cooled models)
- **California Energy Commission-** meets or exceeds CEC guidelines

## MV1006 Technologies

Vertical Super Dice · Total Hygiene Concept · Energy Saving · Water Purity System · agion Nature's antimicrobial

| | | 24h 21°: 10°C [kg] | [lbs] | N°* | 32°: 21°C [kg] | [lbs] | N°* |
|---|---|---|---|---|---|---|---|
| MV1006 AS | | 425 | 937 | 42500 | 320 | 705 | 32000 |
| MV1006 WS | | 405 | 893 | 40500 | 360 | 794 | 36000 |
| MVH1006 AS | | 425 | 937 | 70550 | 320 | 705 | 53120 |
| MVH1006 WS | | 405 | 893 | 67230 | 360 | 794 | 59760 |
| MVL1006 AS | | 395 | 870 | 23235 | 298 | 656 | 23235 |
| MVL1006 WS | | 377 | 893 | 22180 | 360 | 794 | 17530 |
| MVHL1006 AS | | 425 | 937 | 70550 | 320 | 705 | 53120 |
| MVHL1006 WS | | 405 | 893 | 67230 | 360 | 794 | 59760 |

D W H
[WxDxH mm]
760x620x725

[WxDxH inches]
29 15/16 x 24 7/16 x 28 9/16

[v/Hz/ph]
380-400/50/3
Available also
230/50/1

R 404 a

Half Large Cube - 6 g
W 10 x D 24 x H 29 mm

Large Cube - 17 g
W 29 x D 24 x H 29 mm

Dice Cube - 10 g
W 22 x D 24 x H 22 mm

Half Dice Cube - 6 g
W 11 x D 24 x H 22 mm

**2 Years Warranty**
Subject to certain limitations and exclusions

Certified ISO 9001:2008

www.scotsman-ice.com
www.scotsman-ice.it
www.scotsman-ice-on-tablet.com

Models and specifications are subject to change without notice.

5/2015

# Scotsman®
Ice Systems

# MV1006

Other models in this range:
MV306 - MV426 - MV430
MV456 - MV460 - MV606
MV806

## MV Cube Ice Machines up to 485 Kg

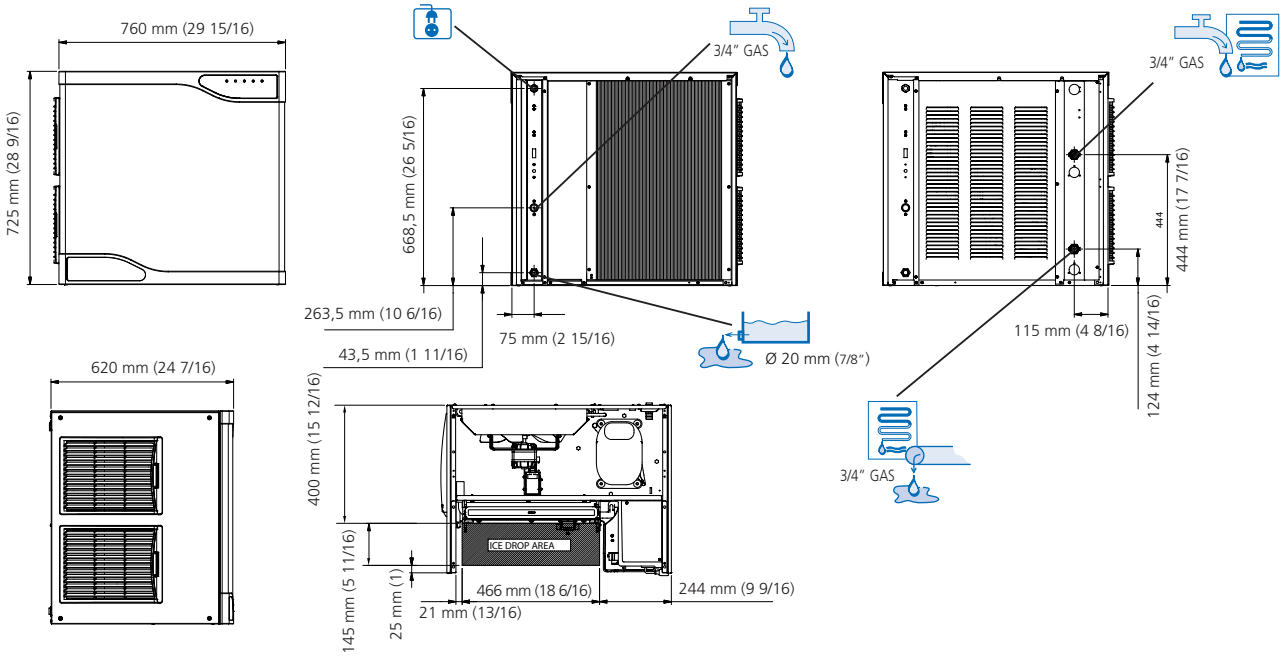


### MV1006 AIR COOLED

| °C \ °F | 50° 10° | 60° 15° | 70° 21° | 90° 32° | |
|---|---|---|---|---|---|
| 10° | 465 | 453 | 440 | 415 | kg |
| 50° | 1025 | 999 | 970 | 915 | lbs |
| 21° | 425 | 415 | 402 | 380 | kg |
| 70° | 937 | 915 | 886 | 838 | lbs |
| 32° | 340 | 330 | 320 | 300 | kg |
| 90° | 750 | 728 | 705 | 661 | lbs |
| 38° | 305 | 298 | 290 | 275 | kg |
| 100 | 672 | 657 | 639 | 606 | lbs |

24h

### MV1006 WATER COOLED

| °C \ °F | 50° 10° | 60° 15° | 70° 21° | 90° 32° | |
|---|---|---|---|---|---|
| 10° | 415 | 400 | 385 | 345 | kg |
| 50° | 915 | 882 | 849 | 761 | lbs |
| 21° | 405 | 390 | 373 | 335 | kg |
| 70° | 893 | 860 | 822 | 739 | lbs |
| 32° | 385 | 373 | 360 | 320 | kg |
| 90° | 849 | 822 | 794 | 705 | lbs |
| 38° | 370 | 360 | 345 | 305 | kg |
| 100 | 816 | 761 | 761 | 672 | lbs |

24h

| Minimum | Maximum |
|---|---|
| 10°C (50°F) | 40°C (104°F) |
| 5°C (41°F) | 35°C (95°F) |
| -10% | +10% |
| 1 BAR 14 psi | 5 BAR 70 psi |

| | +C° -C° | [Btu/h] | [W] | [Ømm²] 400/50/3 | 230/50/1 | [W] | FUSE 400/50/3 | 230/50/1 | 100 Kg [kWh] - 100 Kg | [l/h] | 32°C 90°F 21°C 70°F [gal/h] | [kg] | [lbs] | [kg] | [lbs] |
|---|---|---|---|---|---|---|---|---|---|---|---|---|---|---|---|
| MV1006 AS | | 19400 | 5680 | 5x1,5 | 3x2,5 | 1900 | 10 A | 20 A | 13,5 | 19,5 | 5,2 | 98 | 216 | 116 | 256 |
| MV1006 WS | | 19400 | 5680 | 5x1,5 | 3x2,5 | 1600 | 10 A | 20 A | 10,3 | 220 | 58,1 | 98 | 216 | 116 | 256 |
| MVH1006 AS | | 19400 | 5680 | 5x1,5 | 3x2,5 | 1900 | 10 A | 20 A | 13,5 | 19,5 | 5,2 | 98 | 216 | 116 | 256 |
| MVH1006 WS | | 19400 | 5680 | 5x1,5 | 3x2,5 | 1600 | 10 A | 20 A | 10,3 | 220 | 58,1 | 98 | 216 | 116 | 256 |
| MVL1006 AS | | 19400 | 5680 | 5x1,5 | 3x2,5 | 1900 | 10 A | 20 A | 13,5 | 19,5 | 5,2 | 98 | 216 | 116 | 256 |
| MVL1006 WS | | 19400 | 5680 | 5x1,5 | 3x2,5 | 1600 | 10 A | 20 A | 10,3 | 220 | 58,1 | 98 | 216 | 116 | 256 |
| MVHL1006 AS | | 19400 | 5680 | 5x1,5 | 3x2,5 | 1900 | 10 A | 20 A | 13,5 | 19,5 | 5,2 | 98 | 216 | 116 | 256 |
| MVHL1006 WS | | 19400 | 5680 | 5x1,5 | 3x2,5 | 1600 | 10 A | 20 A | 10,3 | 220 | 58,1 | 98 | 216 | 116 | 256 |