creativeDESIGN

ecoFRIENDLY

innovationMARKET

greenTECHNOLOGY

artofCOOLING

JBG 2

PLUG-IN COLLECTION

PRODUCER OF PROFESSIONAL **Refrigeration Equipment**

20/16

JBG-2 is a dynamically developing producer of refrigeration appliances for shops and supermarket chains. The history of the mark JBG dates back to 1989. The strategy chosen, as well as efficient management combined with passion for creation, fortitude and commitment of our personnel allow us to pursue our goal, i.e. development of a strong enterprise offering modern, energy efficient and ecological solutions to satisfy the needs of the refrigeration equipment market. By way of combining the latest technologies used for our production with high quality of customer service, we gained a broad circle of satisfied partners, including: Auchan Group, Metro Group, Tesco, Delhaize, Spar, as well as many other local commercial chains in Europe, Africa and the Middle East.

The registered office of the company along with the production hall are located on the area of the Special Economic Zone of Katowice, in Warszowice, at the national road No. 81, which forms perfect conditions in terms of logistics. The company has four test laboratories to examine the requirements of the standard ISO23953-2, equipped with modern control and monitoring systems. Quality management is effected directly basing on the standard ISO 9001-2009.

We would like to thank all our Clients for placing their trust in us. We also would like to encourage new Clients to experience cooperation with JBG-2 and to join the circle of our satisfied regular Clients.

With best regards JBG-2 Team

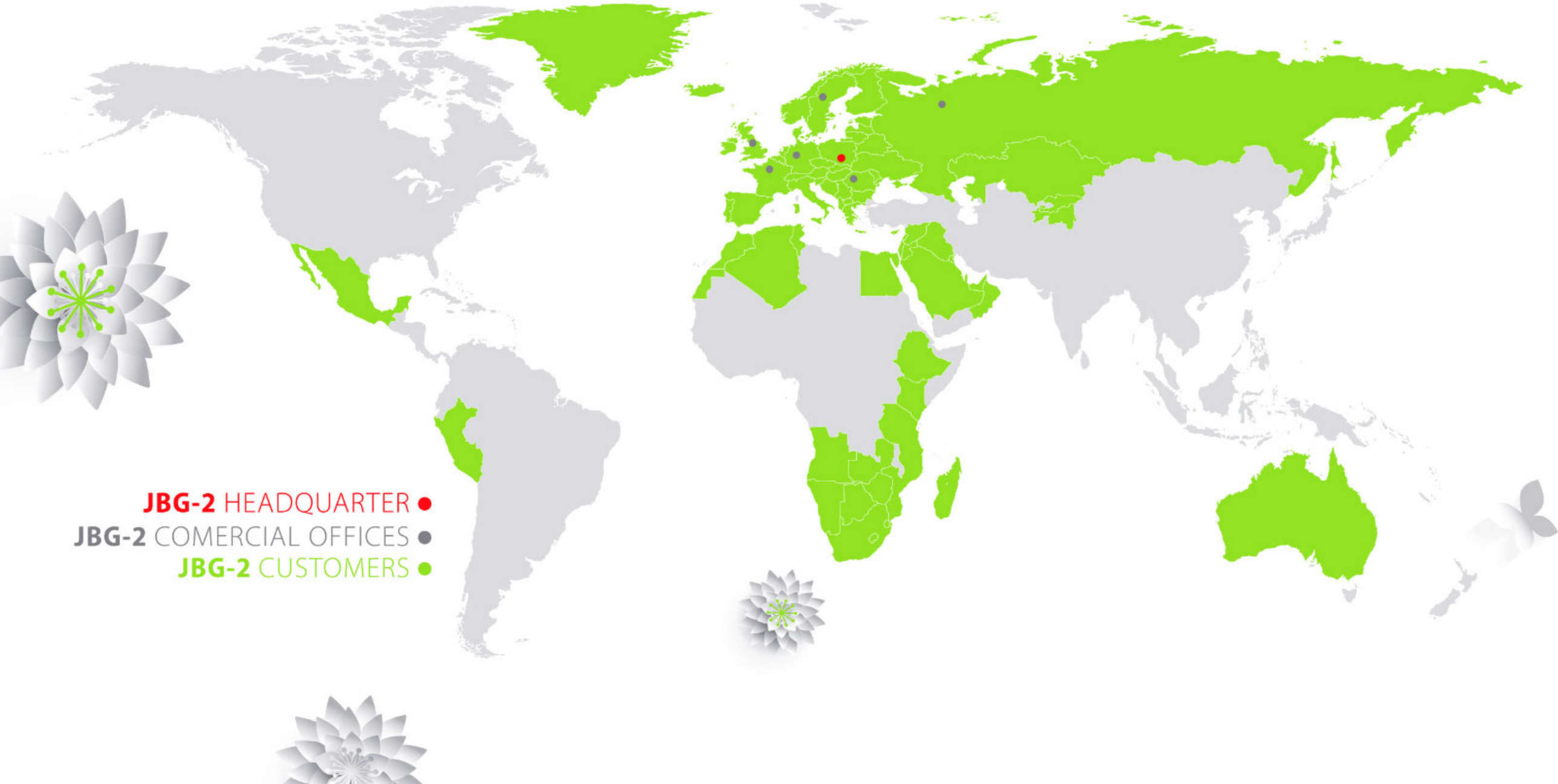
JBG-2 HEADQUARTER
JBG-2 COMERCIAL OFFICES
JBG-2 CUSTOMERS

MULTIDECKS

Medium

RDM-[module]-10 8
RDM-[module]-15 10
RDM-[module]-16 11
RDM-[module]-17 12
RDM-[module]-18 13

Kaukaz

RDK-[module]-11 14
RDK-[module]-15 15

Tarcoola

RDT-[module]-L2 16

SEMI VERTICALS MULTIDECKS

Atlanta

RDA-[module]-10/20 18

COUNTERS

Grazia

LDG-[module]-04 20
LDG-[module]-05 21
LDG-[module]-06 22
LDG-[module]-07 23
LDG-[module]-25 24
LDG-[module]-27 25
LNG-[module]-05 26

Galaxy

MDG-[module]-03 27

Hot Cases

28

PASTRY LINE

Elegant

RDE-[module]-01 30
RDE-[module]-02 31
RDE-[module]-04 32
RDE-[module]-11 33
RDE-[module]-12 34
RDE-[module]-21 35
RDE-[module]-22 36
RDE-[module]-31 37

Hot cases

RGE-[module]-01 38
RGE-[module]-21/31 39

Galaxy

MDG-[module]-01/02 40

PROMOTION

Fidzi

LDF-[module]-07/13 42
LDF-[module]-11 43
LDF-[module]-12 44
LDF-[module]-15 45
LDF-[module]-16 46
LDF-[module]-17 47
LDF-[module]-18 48
LDF-[module]-19 49
LDF-[module]-20 50
LDF-[module]-21 51
LSF-[module]-06 52

ISLANDS

Pamir

WDP-[module]-01 54
WDP-[module]-08 55
WNP-[module]-01 56
WNP-[module]-04 57
WNP-[module]-07 58

Dolomiti

WMD-[module]-01/02 59
Supertstructure 60

CABINETS

Opal

SNO-[module]-D1/D2/G1/G2 62

Topaz

SDT-[module]-D1/D2/G1/G2 62

Forez

SNF-[module]-G1/G2 63

Wetar

SNW/SDW-[module]-L3/L2 63

Weno

MNW-[module]-01 64

INDEX 65

Products shown in the catalogue are just samples and do not constitute an offer as such.
The manufacturer reserves the right to alter the features and technical specifications of its products.
If it is not clearly defined **temperature ranges presented** in this document are for shop conditions (20C/50RH)

Explanation of the coding used in catalogue
(based on Grazia-05 Counter)

D - cooling, fan-assisted unit
N - freezing, fan-assisted unit
S - cooling, static unit
M - freezing, static unit
G - hot cases

05 identifies the model

Grazia L D G - [module]-05

Name of the product range

L counter
R multideck
S cabinet
W island
M mix

First letter of the name of the product range

[module] length

For more info contact our Sales Department:

R290 Green Technology

R600a Green Technology

R134a Environmental Friendly

HFC Free

R407F Environmental Friendly

R404A Environmental Friendly

CO_2 Green Technology

Temperature class PN EN ISO 23953

M0	-1°C / +1°C	M1	0°C / +2°C	M2	+2°C / +4°C	H1	+4°C / +8°C
L1	-25°C / -21°C	L2	-20°C / -16°C	T1	+30°C / +65°C	T2	+30°C / +65°C

Our **Improvements** For Your **Comfort,** Our **Solutions** For Your **Saving.**

energy savings fan available as option

LED available as option

low- E-glass

maintenance free condenser available

MULTIDECKS PLUG IN

MULTIDECKS

Medium RDM-[module]-10

M1

* M0

* for version with R290 and Double Doors

NEW! Green Technology

LED & DOORS AVAILABLE

LOADING CAPACITY

LOW EMISSION GLASS

GOOD PRODUCT VISIBILITY

modules 1.25 1.875 2.5

PLUG-IN Collection JBG 2

MoreINFO

MULTIDECKS

Medium RDM-[module]-10

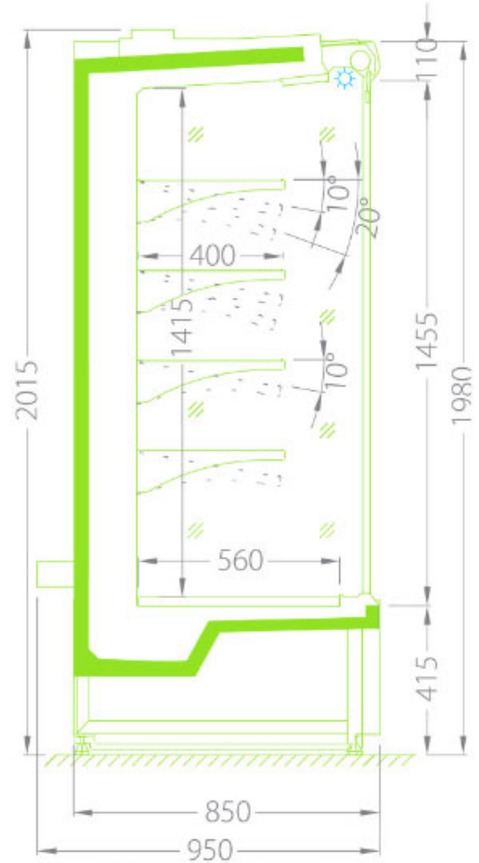

RDM-[module]-10

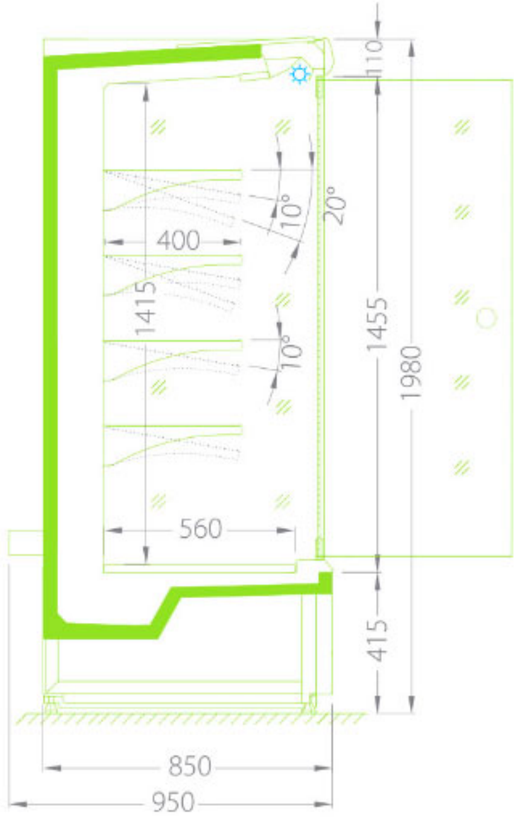

RDM-[module]-10 [option]

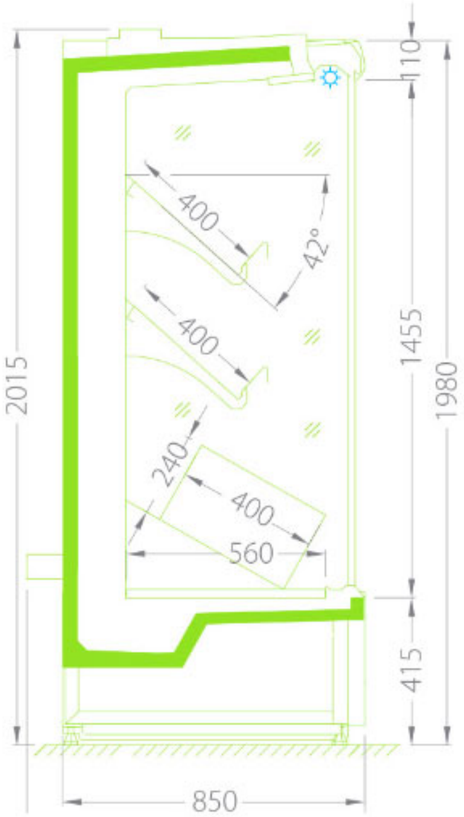

RDM-[module]-10 [option]

MULTIDECKS

Medium RDM-[module]-15

M2

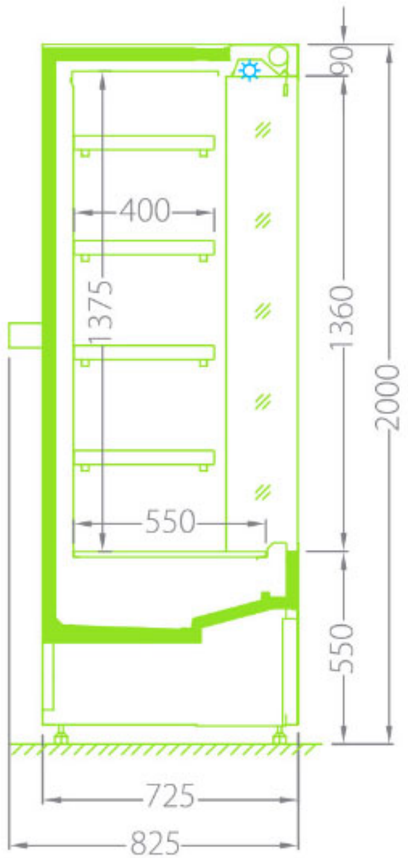

MIRRORED CEILING
(**STAINLESS** STEEL) **AVAILABLE**

LED
& **DOORS**
AVAILABLE

AUTOMATIC EVAPORATION
OF **CONDENSATE**

modules 0.42 . 0.6 0.9 1.25 1.875

PLUG-IN Collection

JBG 2

MULTIDECKS

Medium RDM-[module]-16

M2

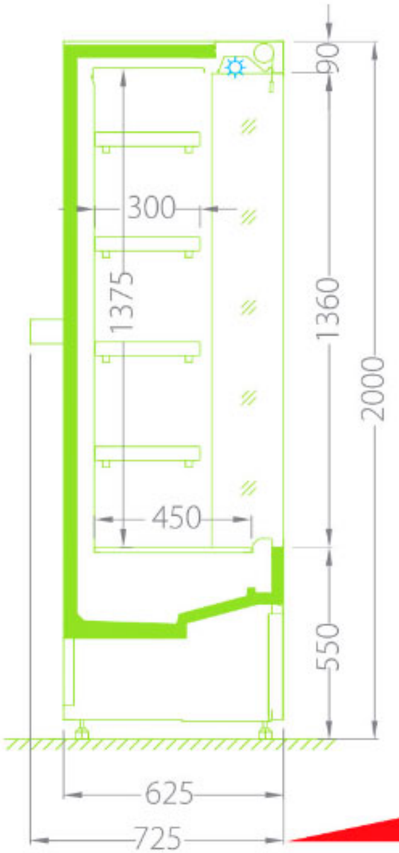

LED
& DOORS
AVAILABLE

AUTOMATIC
EVAPORATION
OF **CONDENSATE**

modules 0.42 0.6 0.9 1.25 1.875

PLUG-IN Collection

JBG 2

MoreINFO

MULTIDECKS

Medium RDM-[module]-17

M2

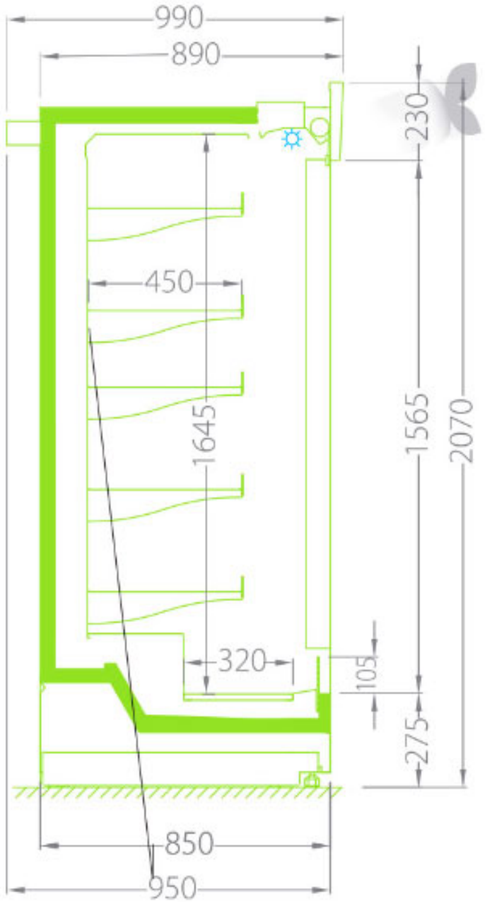

LED & DOORS AVAILABLE

LOADING **CAPACITY**
GOOD PRODUCT **VISIBILITY**

AUTOMATIC EVAPORATION OF **CONDENSATE**

modules 0.6 0.8 1.16

PLUG-IN Collection

JBG 2

MULTIDECKS

Medium RDM-[module]-18

H1

NEW! Green Technology

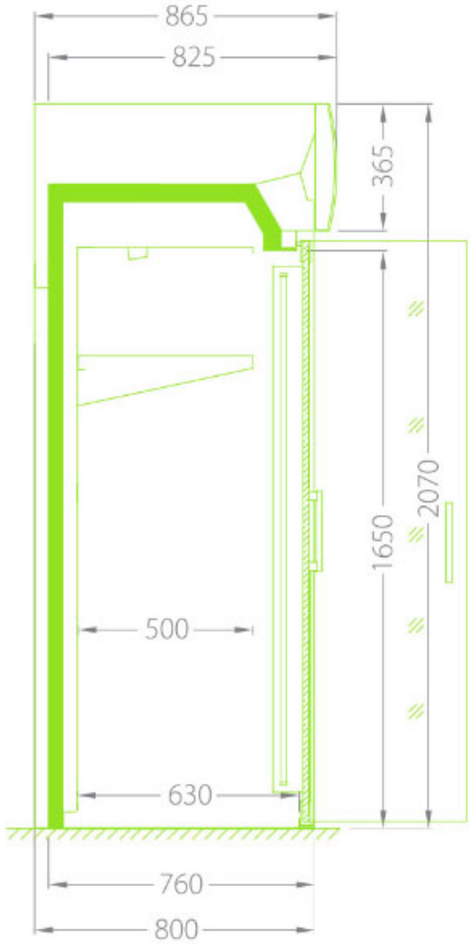

TOP ADVERTISEMENTELEMENT
WITH LED **LIGHTING** AS **STANDARD**

GOOD PRODUCT **VISIBILITY**
LOADING **CAPACITY**

DOORS - ENERGY
SAVING UP TO **60%**

LED AVAILABLE

module 1.0

PLUG-IN Collection

JBG 2

MoreINFO

MULTIDECKS

Kaukaz RDK-[module]-11

M2

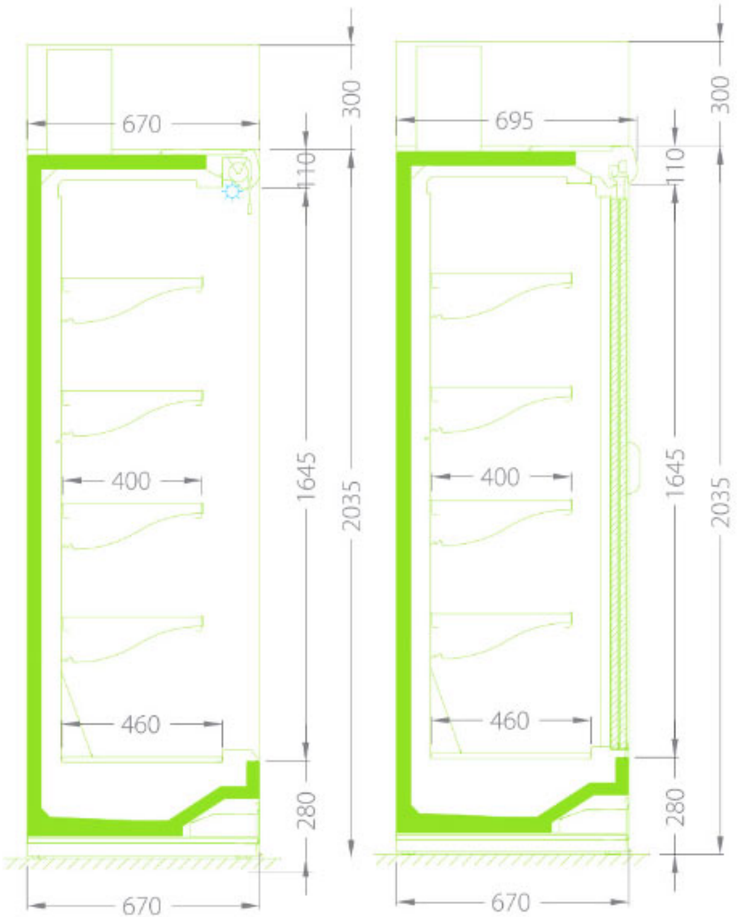

LED AVAILABLE

DOORS - ENERGY SAVING UP TO **60%**

GOOD PRODUCT **VISIBILITY**

LOADING **CAPACITY**

modules 1.25 2.5 3.75

MoreINFO

PLUG-IN Collection

JBG 2

MULTIDECKS

Kaukaz RDK-[module]-15

M2

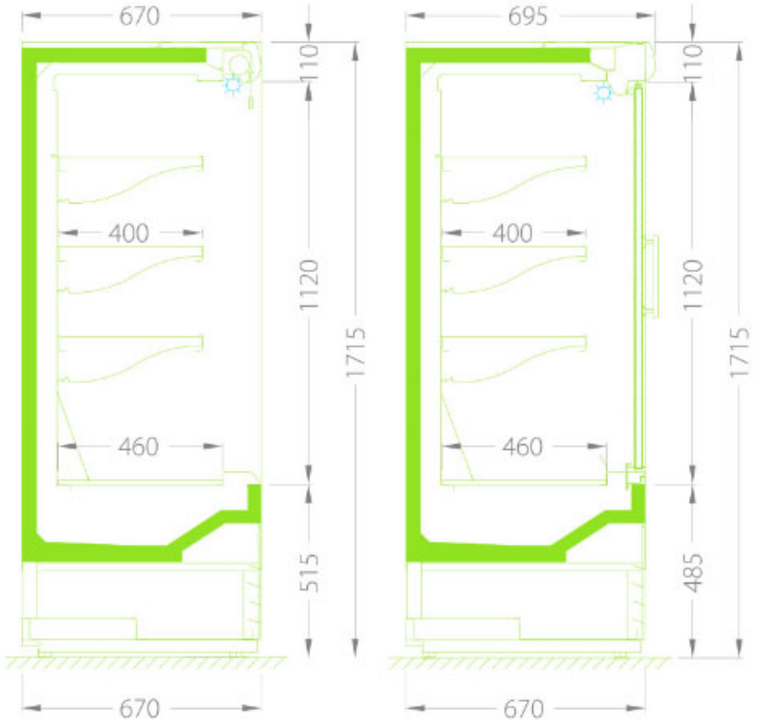

GOOD PRODUCT
VISIBILITY
LOADING **CAPACITY**

DOORS - ENERGY
SAVING UP TO **60%**

LED AVAILABLE

module 1.25 1.875

PLUG-IN Collection

JBG 2

MoreINFO

MULTIDECKS

Medium RDT-[module]-L2

M1

M2

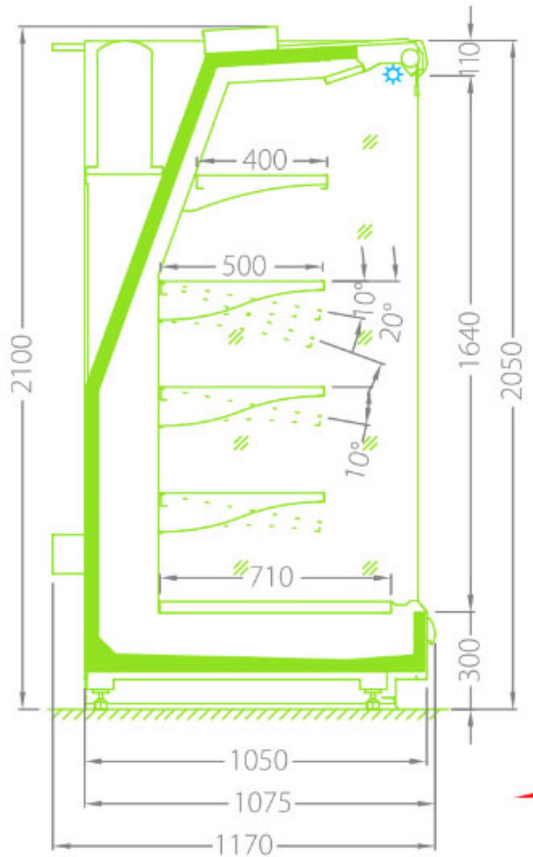

LED & DOORS AVAILABLE
NIGHT **BLIND** OPTIONALLY

FULL **SIDEWALL** WITH **MIRROR** OPTIONALLY

module 1.25 1.875 2.15 2.5 3.75

PLUG-IN Collection

JBG 2

MoreINFO

Our **Improvements** For Your **Comfort,** Our **Solutions** For Your **Saving.**

energy savings fan available in option

LED available in option

low-E-glass

maintenance free condenser available

SEMI VERTICALS MULTIDECKS

PLUG IN

SEMI VERTICALS MULTIDECKS

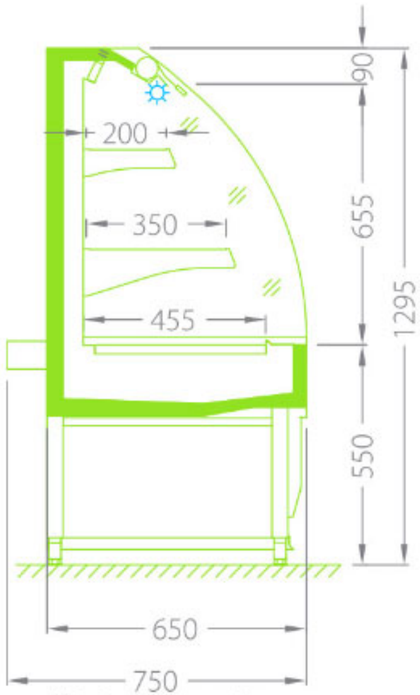

RDA-[module]-10

MoreINFO

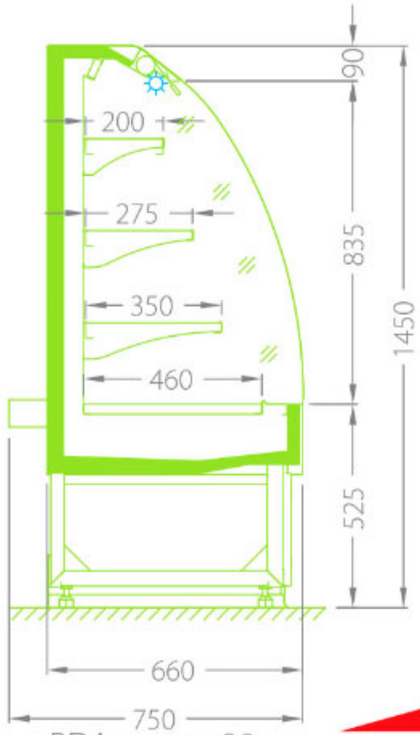

RDA-[module]-20

MoreINFO

Atlanta RDA-[module]-10/20

GOOD PRODUCT **VISIBILITY**

LED AVAILABLE

M1

modules 0.94 1.25 1.875 2.5

modules 0.88 1.18 1.875 2.5

PLUG-IN Collection

JBG 2

Our **Improvements** For Your **Comfort,** Our **Solutions** For Your **Saving.**

energy savings fan available as option

LED

LED available as option

low-E-glass

maintenance free condenser available

TILT forward GLASS

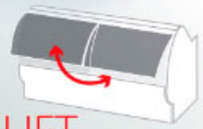

LIFT up GLASS

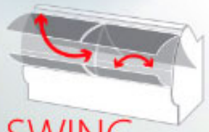

SWING glass SYSTEM

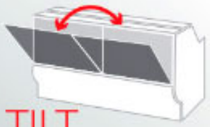

TILT forward GLASS

LIFT up GLASS

COUNTERS PLUGIN

COUNTERS

Grazia LDG-[module]-04

M1

M2

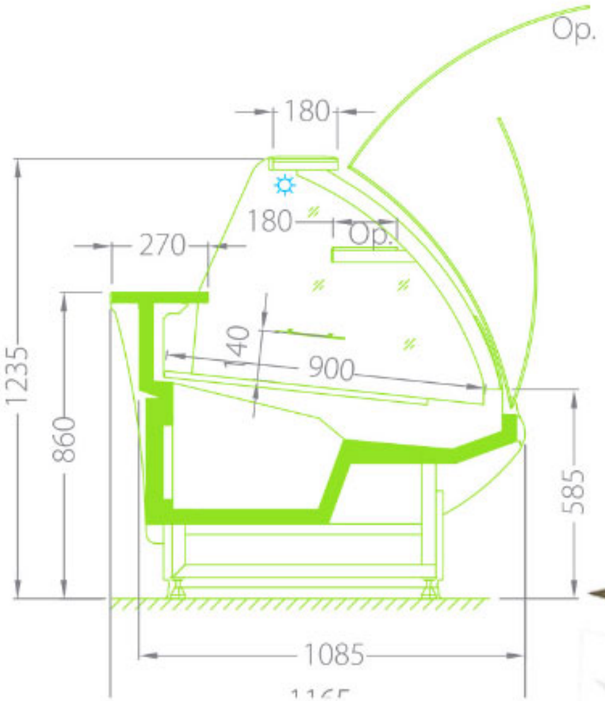

LED AVAILABLE
GLASS BENDED, **TEMPERED**, OPENED **FORWARD**
(IN **CORNERS LIFT-UP**)

MAINTENANCE **FREE** CONDENSER **AVAILABLE**
AUTOMATIC **EVAPORATION** OF **CONDENSATE**

corners NZ45 NZ90 NW45 NW90

modules 0.94 1.25 1.56 1.795 1.88 2.19 2.5 3.75

MoreINFO

PLUG-IN Collection JBG 2

COUNTERS

Grazia LDG-[module]-05

M1

M2

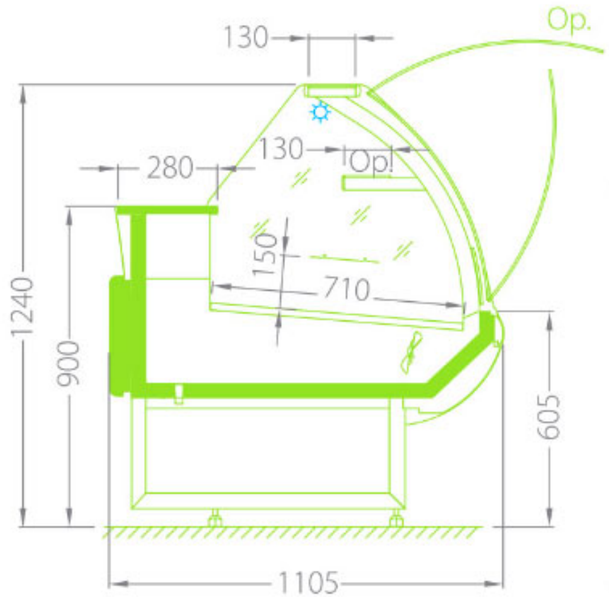

LED AVAILABLE
GLASS BENDED, **TEMPERED**, OPENED **FORWARD**
MAINTENANCE **FREE** CONDENSER **AVAILABLE**
GOOD PRODUCT **VISIBILITY**

corners NZ45 NZ90 NW45 NW90

modules 1.2 1.5 1.7 2.0 2.5 3.0

PLUG-IN Collection

JBG 2

MoreINFO

COUNTERS

Grazia LDG-[module]-06

M1

M2

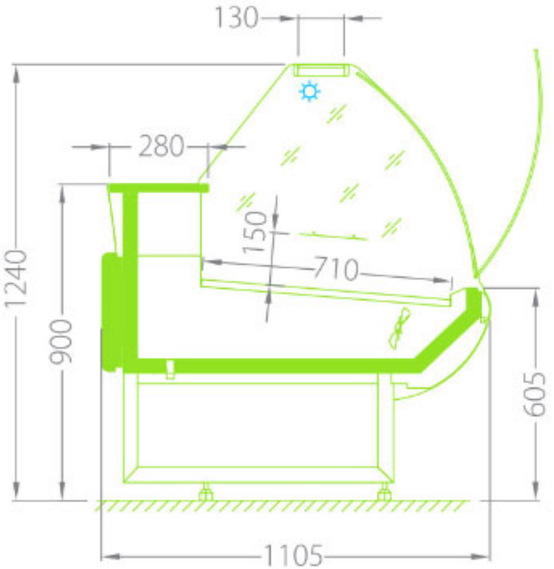

LED AVAILABLE
GOOD PRODUCT **VISIBILITY**
GLASS BENDED, **TEMPERED**, OPENED **FORWARD**

SINGLE
MODULES **ONLY**

modules 1.2 1.5 1.7 2.0 2.5 3.0

MoreINFO

PLUG-IN Collection JBG 2

COUNTERS

Grazia LDG-[module]-07

M1

M2

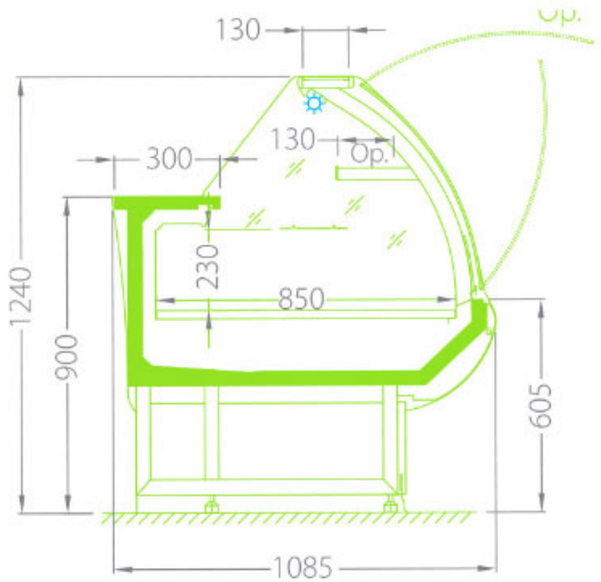

LED AVAILABLE
GOOD PRODUCT **VISIBILITY**
GLASS BENDED, **TEMPERED**
OPENED **FORWARD**

modules 1.25 1.4 1.625 1.925 2.5 3.75

PLUG-IN Collection

JBG 2

MoreINFO

COUNTERS

Grazia LDG-[module]-25

M1

M2

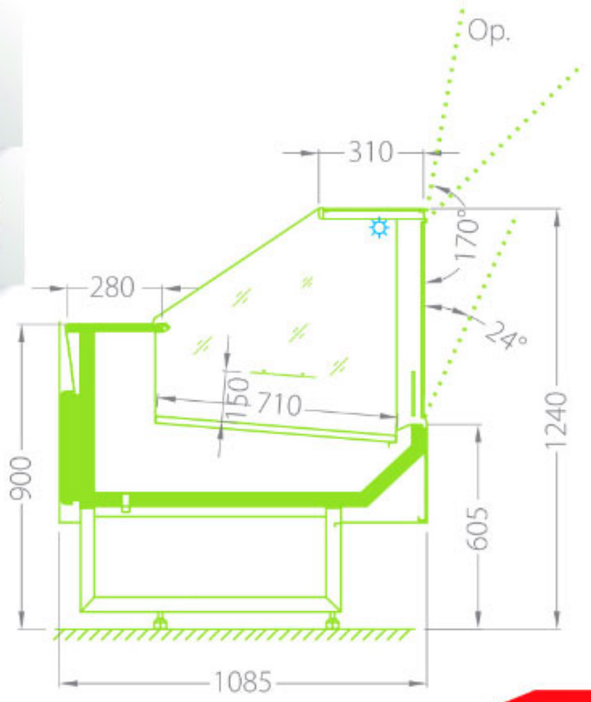

LED AVAILABLE
LOADING **CAPACITY**
GOOD PRODUCT **VISIBILITY**

MAINTENANCE **FREE** CONDENSER **AVAILABLE**
GLASS STRAIGHT, **TEMPERED**, OPENED **FORWARD**

corners NZ45 NZ90 NW45 NW90

modules 1.2 1.5 1.7 2.0 2.5 3.0

MoreINFO

PLUG-IN Collection JBG 2

COUNTERS

Grazia LDG-[module]-27

GLASS STRAIGHT, **TEMPERED**, OPENED **FORWARD**
MAINTENANCE **FREE** CONDENSER **AVAILABLE**

LED AVAILABLE
GOOD PRODUCT **VISIBILITY**
LOADING **CAPACITY**

M1

M2

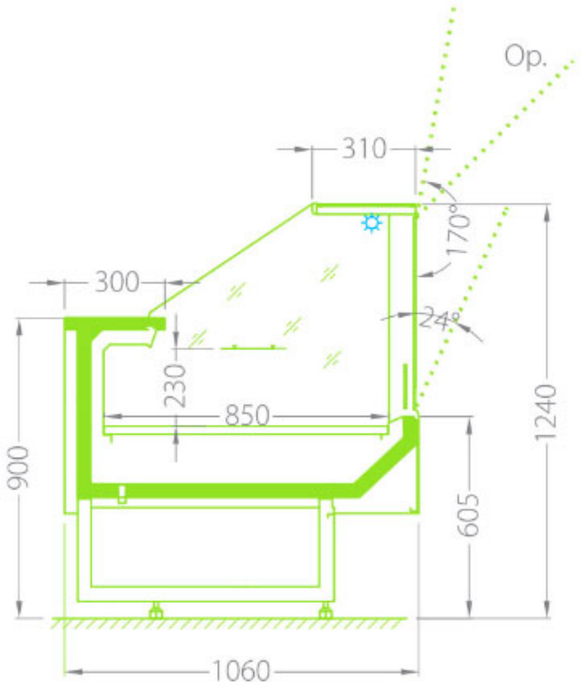

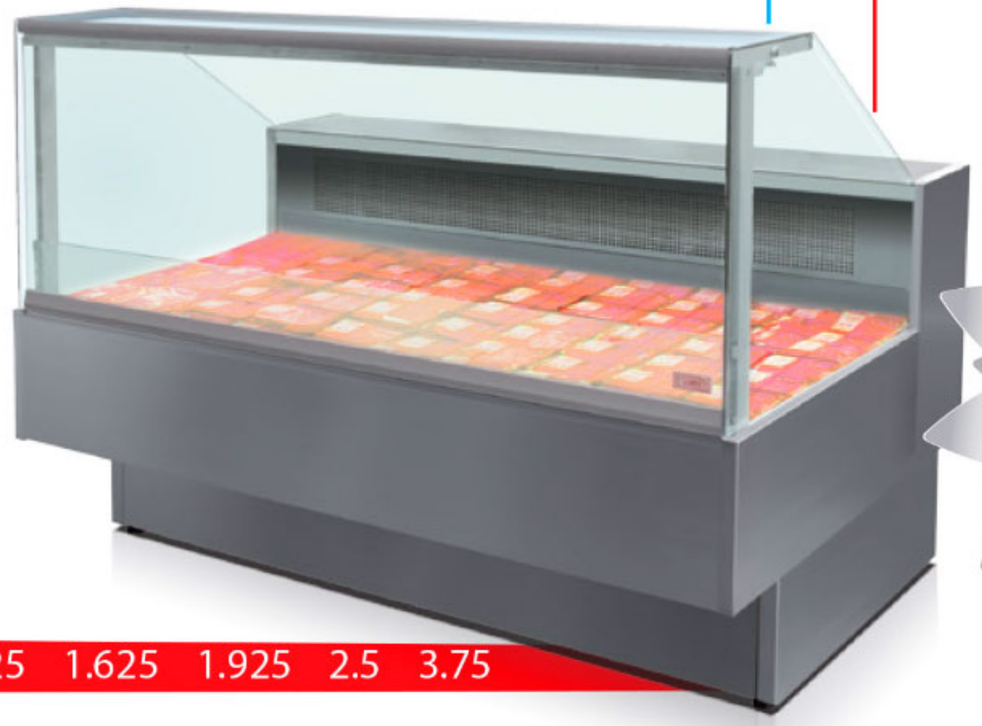

modules 1.25 1.625 1.925 2.5 3.75

PLUG-IN Collection JBG 2

MoreINFO

COUNTERS

Grazia LNG-[module]-05

GOOD PRODUCT **VISIBILITY**
LOADING **CAPACITY**

LED AVAILABLE

L1

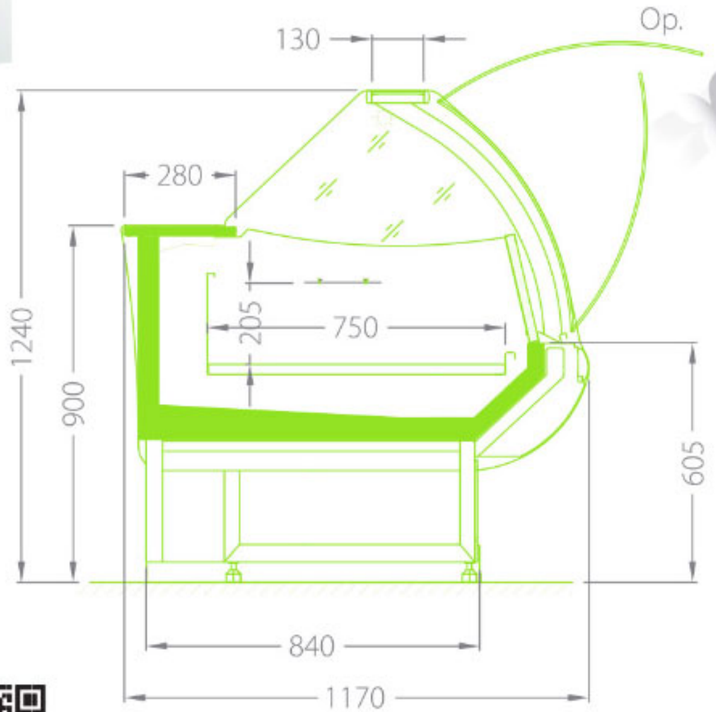

module 1.5 2.0 2.5

PLUG-IN Collection

JBG 2

MoreINFO

COUNTERS

Galaxy MDG-[module]-03

SELF SERVICE | **LED** AVAILABLE

M2

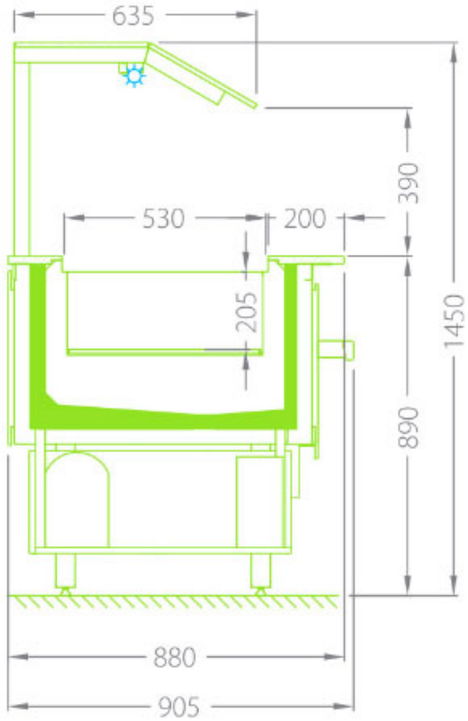

modules 0.985 1.31

MoreINFO

PLUG-IN Collection JBG 2

COUNTERS

HotCASES
Grazia LGG

T1 +30℃...+65℃

T2 +30℃...+85℃

Specialized Equipment
for Catering and Foodservice
Heated units hot plate bain-marie

Explore our new and modern appliances.

For**More**
Info**Contact**
Our**Sale**
Department

MoreINFO

PLUG-IN Collection JBG 2

Our **Improvements** For Your **Comfort,** Our **Solutions** For Your **Saving.**

energy savings fan

LEDit. as standard

low emission glass

maintenance free condenser available

PASTRY LINE PLUG IN

PASTRY LINE

Elegant RDE-[module]-01

LOW EMISSION **GLASS**

LEDit AS STANDARD

TRADITIONAL SERVICE

GOOD PRODUCT **VISIBILITY**
MAINTENANCE **FREE**
CONDENSER **AVAILABLE**

modules 0.6 0.9 1.4 NZ45 NW45

M1

M2

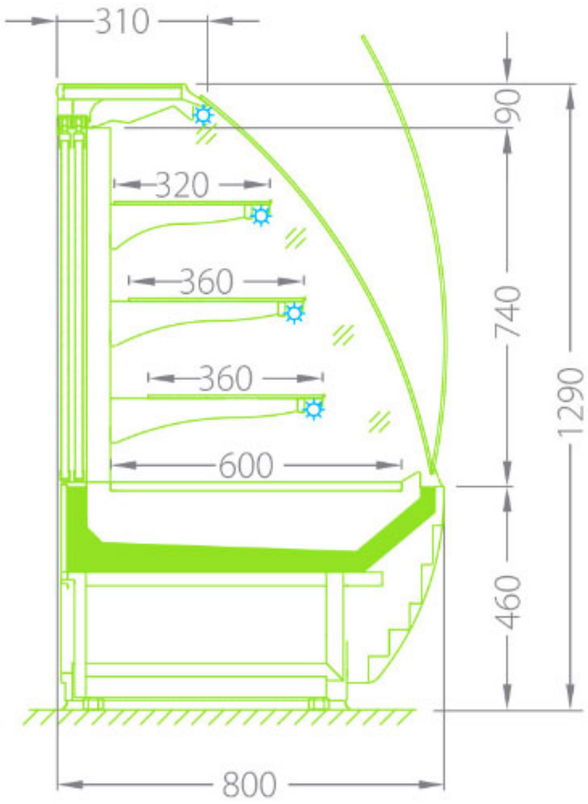

MoreINFO

PLUG-IN Collection

JBG 2

PASTRY LINE

Elegant RDE-[module]-02

M1

M2

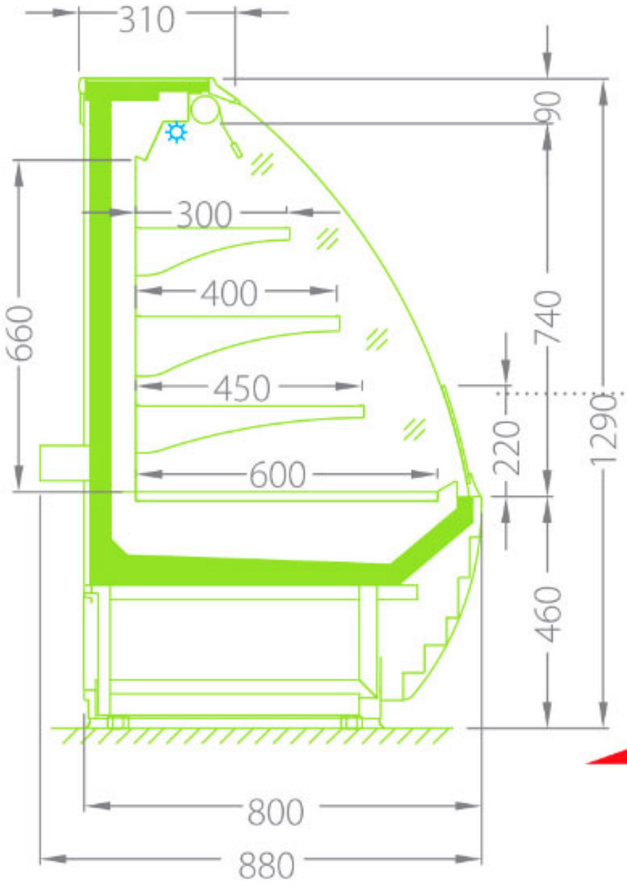

MoreINFO

LOW EMISSION **GLASS**

LEDit AS STANDARD

SELF SERVICE

MAINTENANCE **FREE**
CONDENSER **AVAILABLE**
GOOD PRODUCT **VISIBILITY**

modules 0.6 0.9 1.2 1.4 1.875

PLUG-IN Collection

JBG 2

PASTRY LINE

Elegant RDE-[module]-04

M2

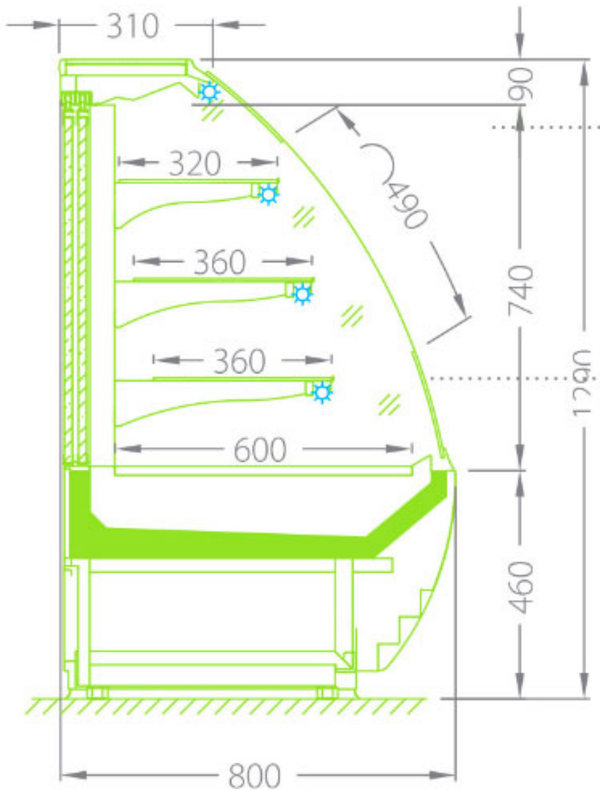

LOW EMISSION **GLASS**

LEDit AS STANDARD

BACK LOADING

SEMI SELF **SERVICE**

GOOD PRODUCT **VISIBILITY**

MAINTENANCE **FREE**
CONDENSER **AVAILABLE**

module 0.9

PLUG-IN Collection

JBG 2

MoreINFO

PASTRY LINE

Elegant RDE-[module]-11

LEDit AS STANDARD | **BACK** LOADING

M2

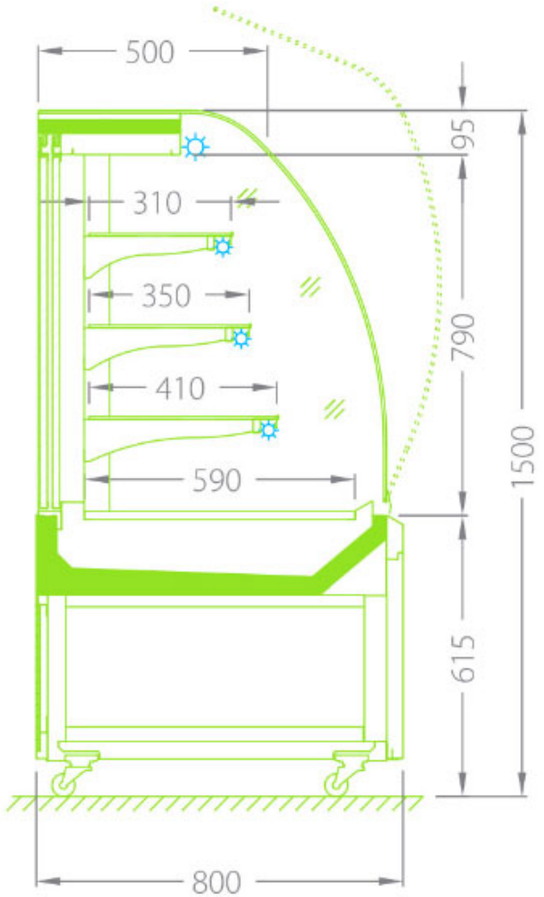

TRADITIONAL SERVICE

LOW EMISSION **GLASS**
GOOD PRODUCT **VISIBILITY**

MAINTENANCE **FREE**
CONDENSER **AVAILABLE**

module 0.9

PLUG-IN Collection

JBG 2

MoreINFO

PASTRY LINE

Elegant RDE-[module]-12

M2

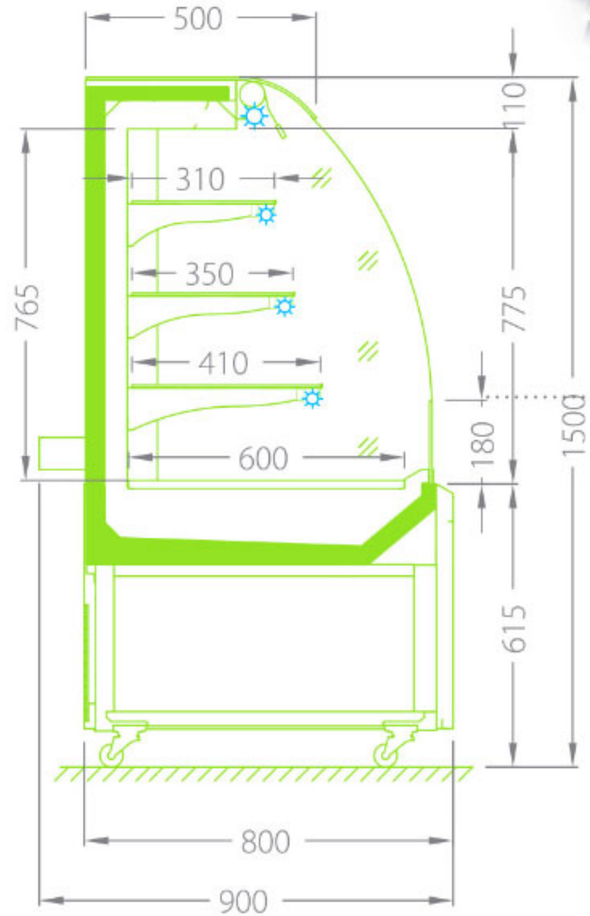

LEDit AS STANDARD

LOW EMISSION **GLASS**
GOOD PRODUCT
VISIBILITY

SELF **SERVICE**

MAINTENANCE **FREE**
CONDENSER **AVAILABLE**

module 1.2

PLUG-IN Collection

JBG 2

MoreINFO

PASTRY LINE

Elegant RDE-[module]-21

M1

M2

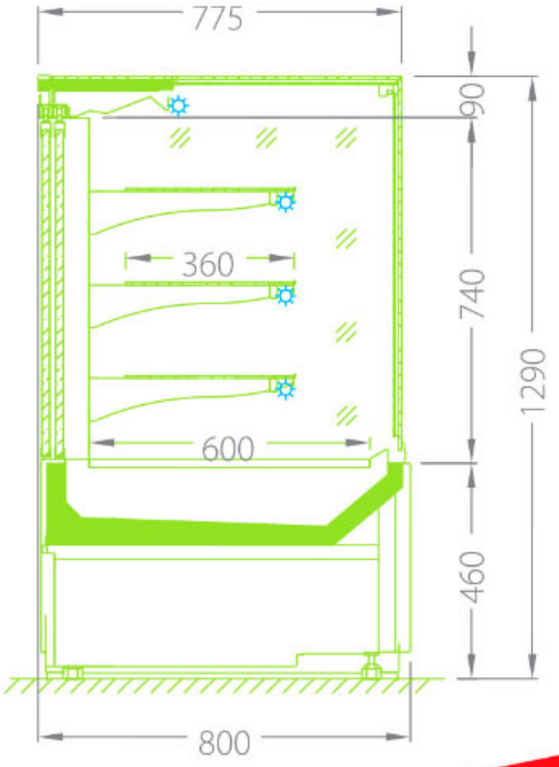

GOOD PRODUCT **VISIBILITY**

LEDit AS STANDARD

TRADITIONAL SERVICE

LOW EMISSION **GLASS**

modules 0.6 0.9 1.4 NZ45

PLUG-IN Collection

JBG 2

MoreINFO

PASTRY LINE

Elegant RDE-[module]-22

GOOD PRODUCT **VISIBILITY**
MAINTENANCE **FREE** CONDENSER **AVAILABLE**

LEDit
AS STANDARD

M2

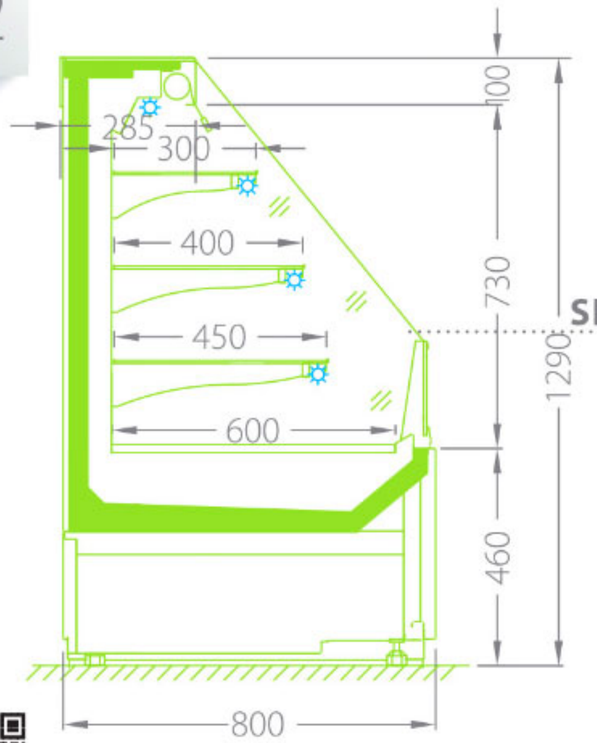

modules 0.9 1.4

RDE-[module]-21

RDE-[module]-22

MoreINFO

PLUG-IN Collection

JBG 2

PASTRY LINE

Elegant RDE-[module]-31

M1

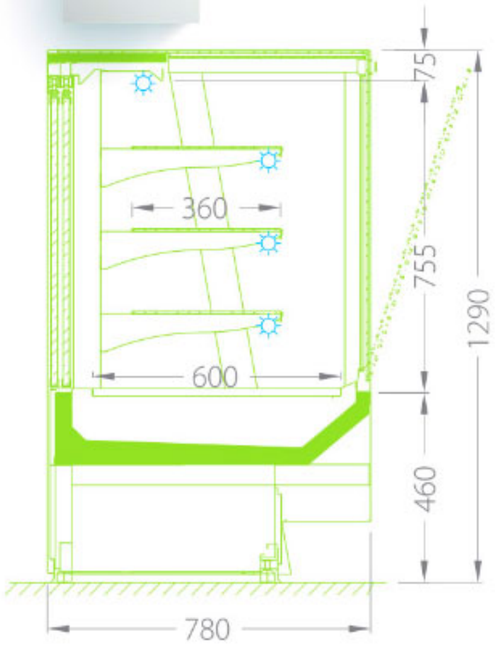

RDE-[module]-31

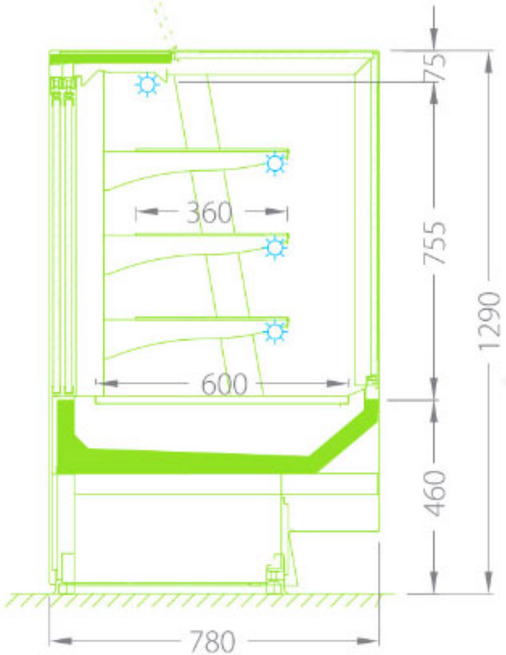

RDE-[module]-31 [option]

MoreINFO

TRADITIONAL SERVICE

GOOD PRODUCT VISIBILITY
LOW EMISSION GLASS

LEDit AS STANDARD

MAINTENANCE FREE CONDENSER AVAILABLE

modules 0.6 0.9 1.4 NZ45

PLUG-IN Collection

JBG 2

PASTRY LINE HotCASES

Elegant RGE-[module]-01

T2

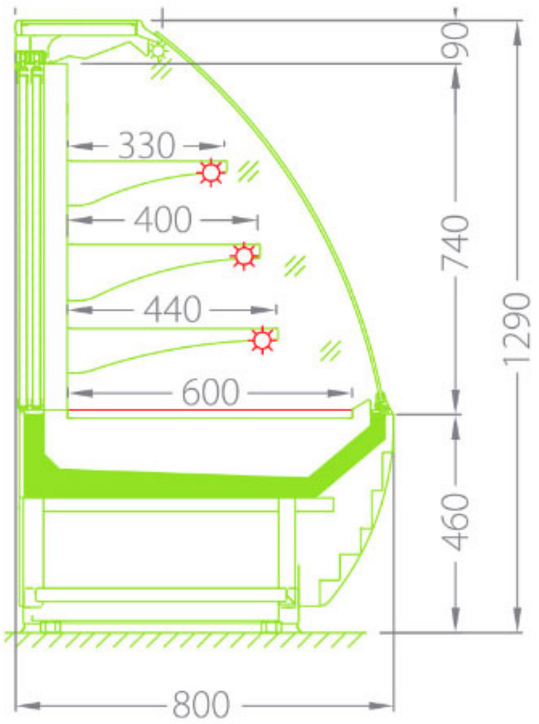

LED AVAILABLE

TRADITIONAL SERVICE

LOW EMISSION GLASS
GOOD PRODUCT VISIBILITY

module 0.6

PLUG-IN Collection

JBG 2

For More Info Contact Our Sale Department

MoreINFO

PASTRY LINE HotCASES

Elegant RGE-[module]-21/31

T2

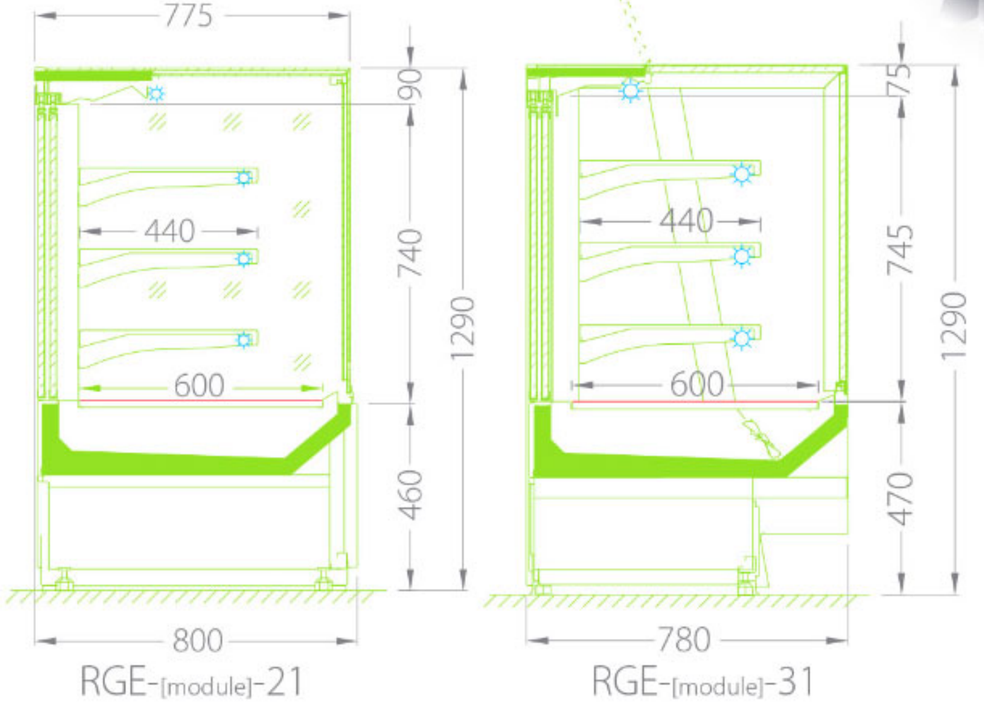

LOW EMISSION GLASS

LEDit AS STANDARD

TRADITIONAL SERVICE

GOOD PRODUCT VISIBILITY

module 1.4

PLUG-IN Collection

JBG 2

For More Info Contact Our Sale Department

More INFO

PASTRY LINE

Galaxy MDG-[module]-01/02

M1

NEW!
Green Technology

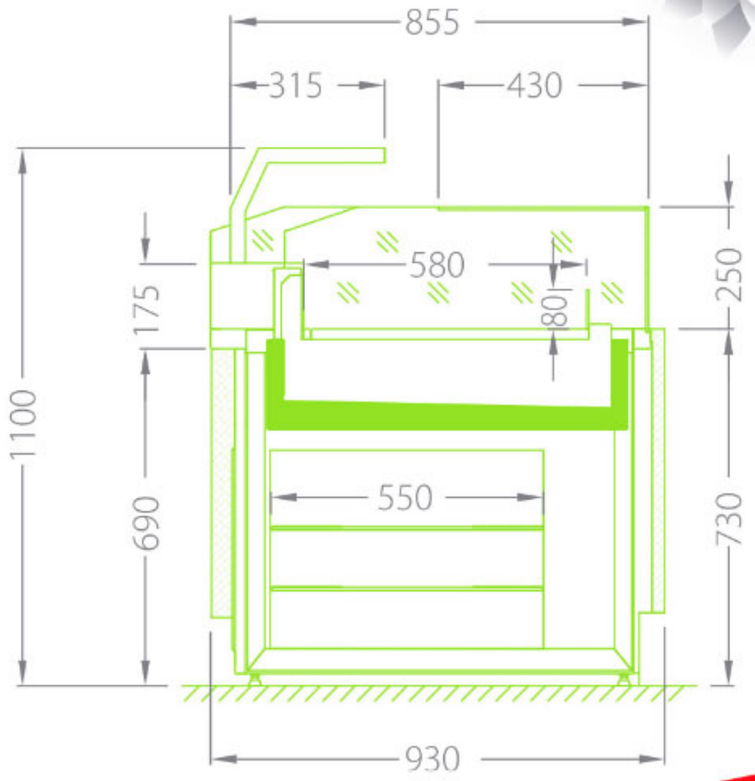

LED AVAILABLE

LOW EMISSION GLASS
GOOD PRODUCT VISIBILITY

modules 1.35 2.0

PLUG-IN Collection

JBG 2

Our **Improvements** For Your **Comfort,** Our **Solutions** For Your **Saving.**

energy savings fan

LED

LED available in option

low emission glass

maintenance free condenser available

SLIDING glass COVER

PROMOTION PLUGIN

PROMOTION

Fidżi LDF-[module]-07/13

M2

M1

* for sensitive products only

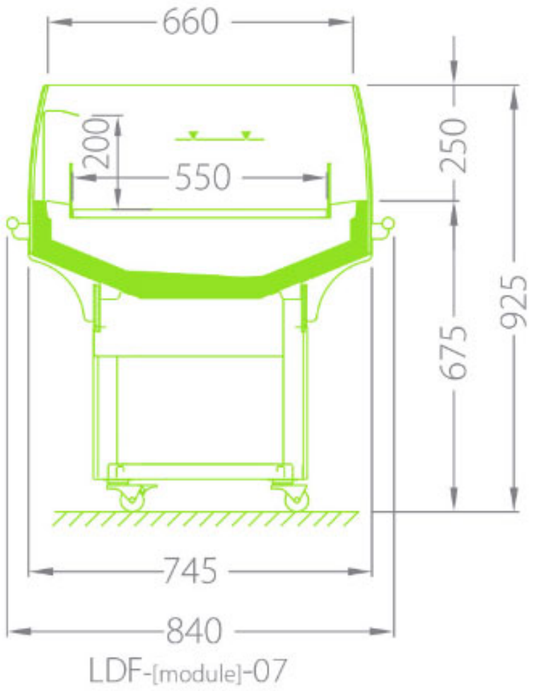

LDF-[module]-07

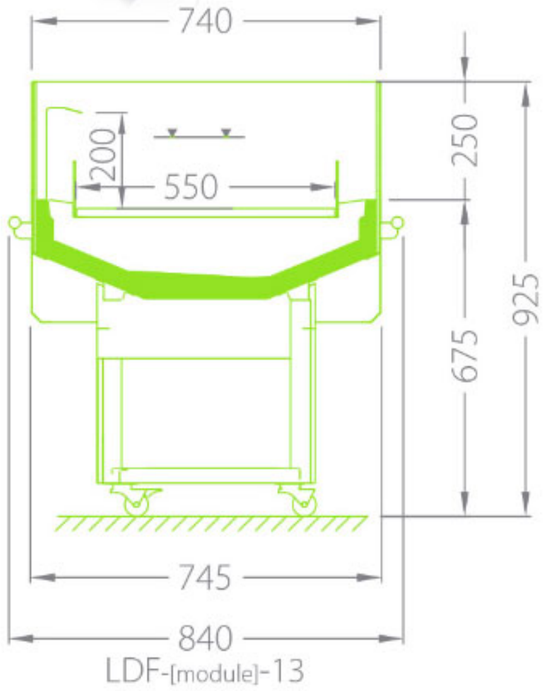

LDF-[module]-13

MAINTENANCE FREE **CONDENSER** AVAILABLE

COVERS AVAILABLE SINGLE **GLASS** BENDED, **TEMPERED**

modules 0.7 0.9

MoreINFO

PLUG-IN Collection JBG 2

PROMOTION

Fidżi LDF-[module]-11

M2

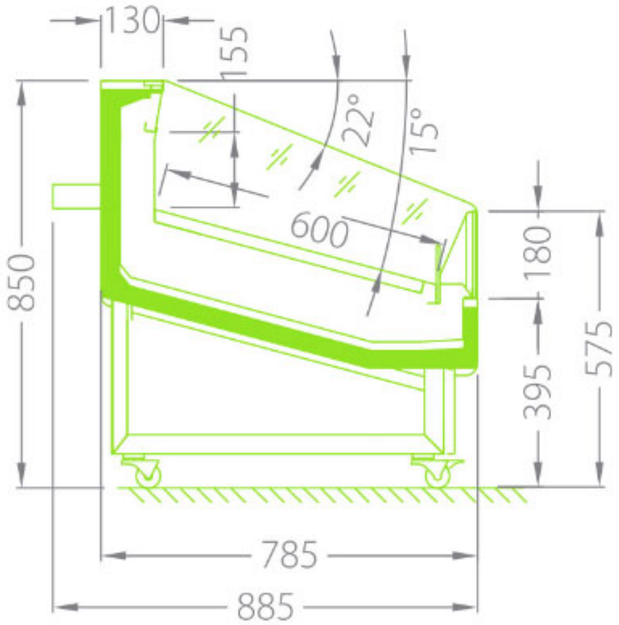

SIDEWALLS- **PLEXIGLASS**
WITH **GREY** SILK **SCREEN** PAINTING

MAINTENANCE
FREE **CONDENSER**
AVAILABLE

module 1.18

PLUG-IN Collection

JBG 2

MoreINFO

PROMOTION

Fidżi LDF-[module]-12

M2

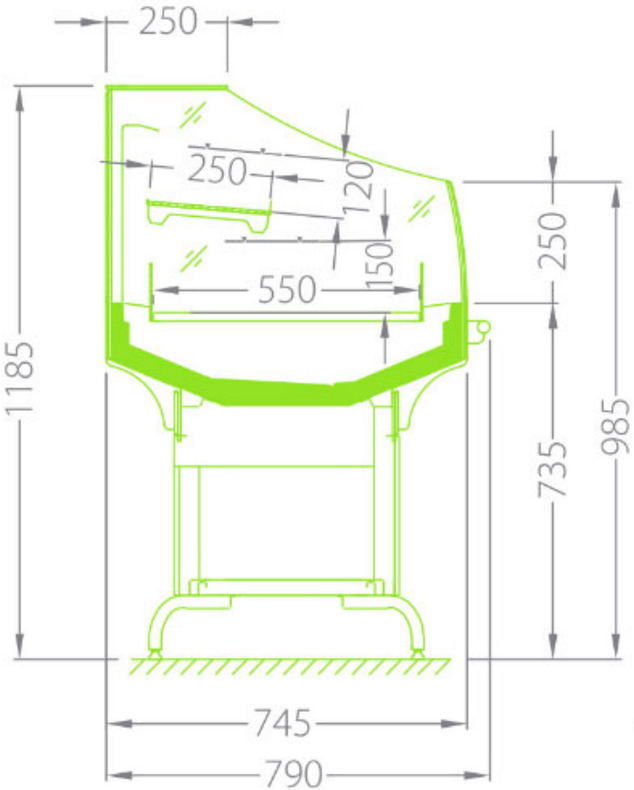

COVERS AVAILABLE

LOW EMISSION **GLASS**

MAINTENANCE FREE
CONDENSER AVAILABLE

modules 0.7 0.9

PLUG-IN Collection

JBG 2

MoreINFO

PROMOTION

M1

NEW! Green Technology

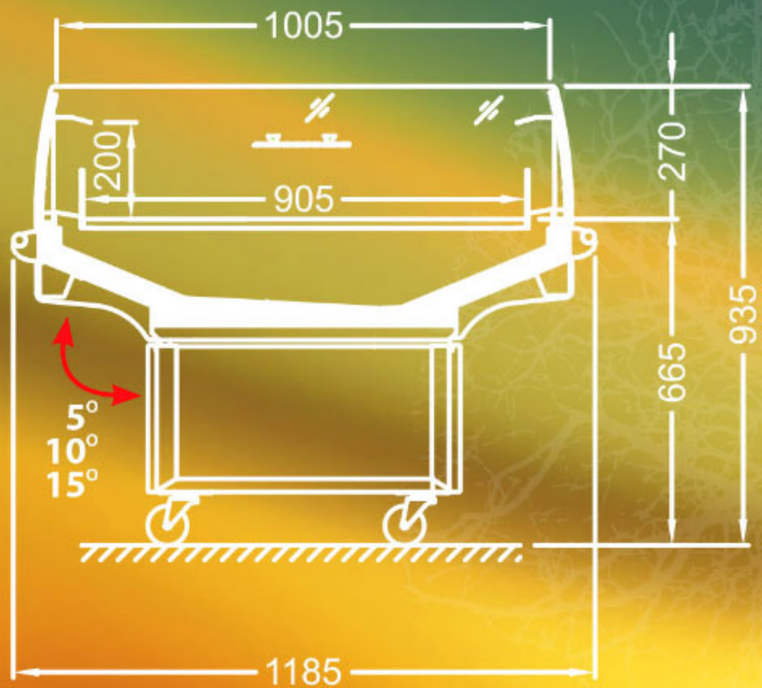

Fidżi LDF-[module]-15

COVERS AVAILABLE

MAINTENANCE FREE
CONDENSER

modules 1.0 1.25 1.6

MoreINFO

PLUG-IN Collection

NO MAINTENANCE

NOMAINTENANCE

PROMOTION

Fidżi LDF-[module]-16

M2

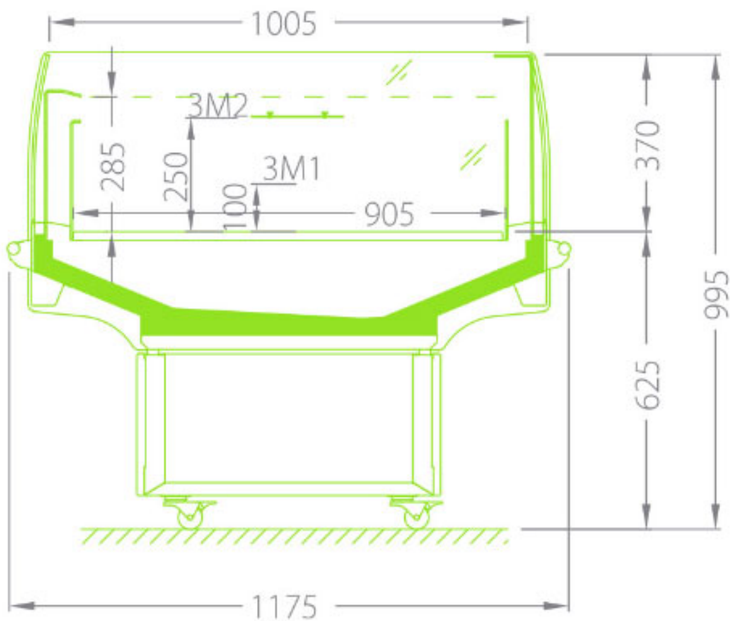

HIGH LOADING **CAPACITY**

STRAIGHT **PLEXIGLASS**

COVERS AVAILABLE

MAINTENANCE FREE **CONDENSER**

module 1.25

PLUG-IN Collection

JBG 2

MoreINFO

PROMOTION

Fidżi LDF-[module]-17

M2

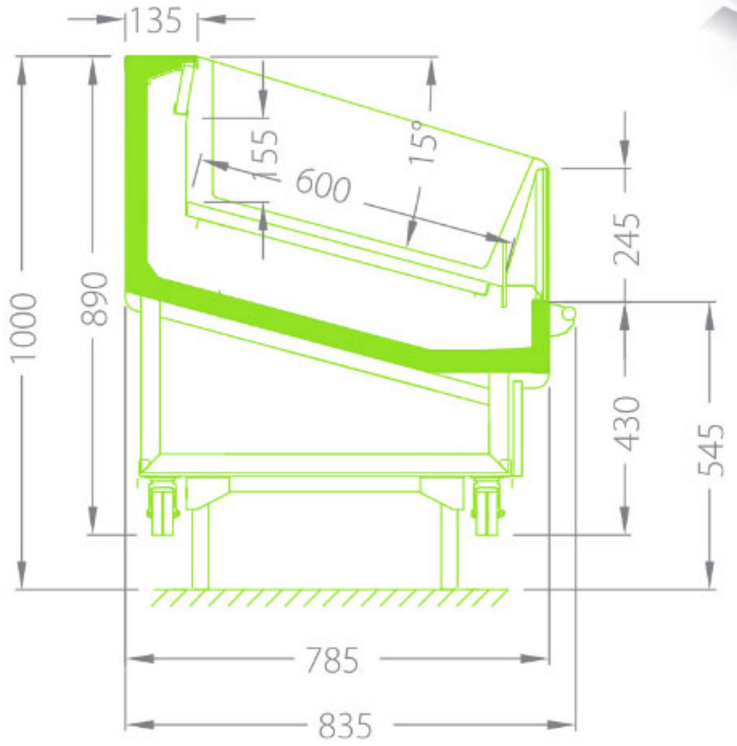

SIDEWALLS **LEXIGLASS**

MAINTENANCE FREE **CONDENSER**

FRONT WALL SINGLE **GLASS** STRAIGHT

module 1.18

MoreINFO

PLUG-IN Collection

JBG 2

PROMOTION

Fidżi LDF-[module]-18

M1

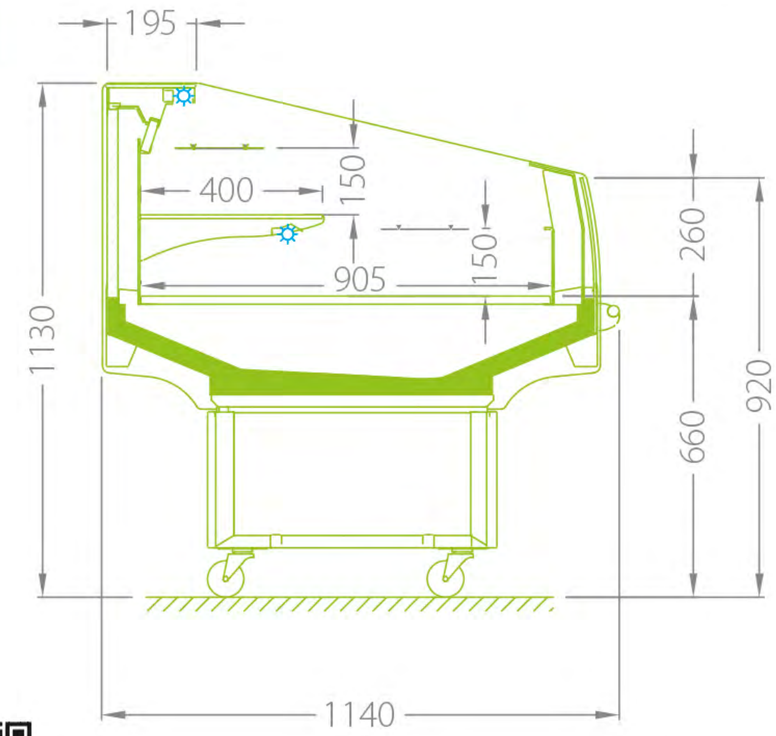

SIDEWALLS AND **BACKWALL**
THERMOPANE GLASS

COVERS AVAILABLE

FRONT WALL
SINGLE **GLASS**

MAINTENANCE
FREE **CONDENSER**
AVAILABLE

module 1.25

PLUG-IN Collection

JBG 2

MoreINFO

PROMOTION

Fidżi LDF-[module]-19

SIDEWALLS AND **BACKWALL**
- **THERMOPANE** GLASS

M1

M2

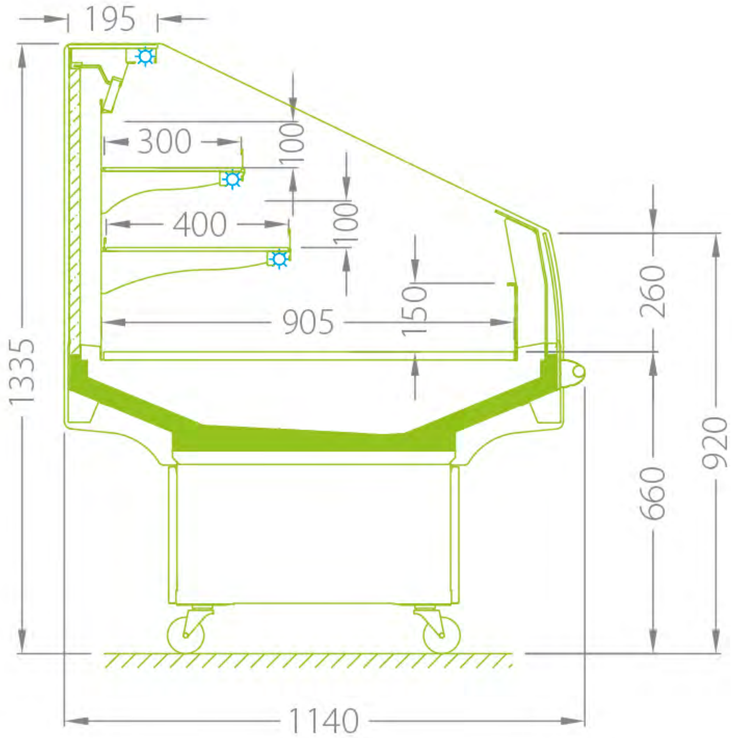

FRONT WALL
SINGLE **GLASS**

module 1.25

PLUG-IN Collection

JBG 2

MoreINFO

PROMOTION

Fidżi LDF-[module]-20

M2

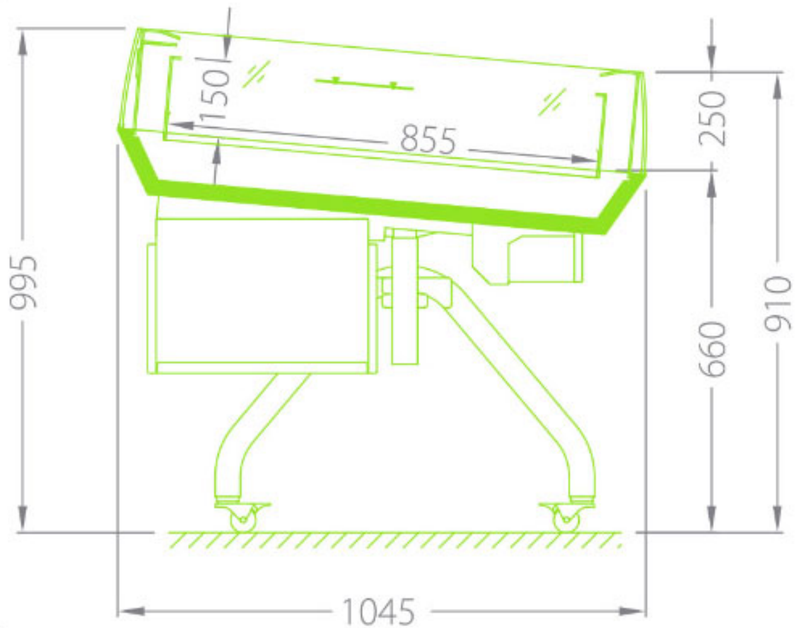

SINGLE **GLASS** BENDED **TEMPERED**

SLIM VERSION

MAINTENANCE FREE **CONDENSER** AVAILABLE

module 1.25

PLUG-IN Collection

JBG 2

MoreINFO

PROMOTION

Fidżi LDF-[module]-21

M1

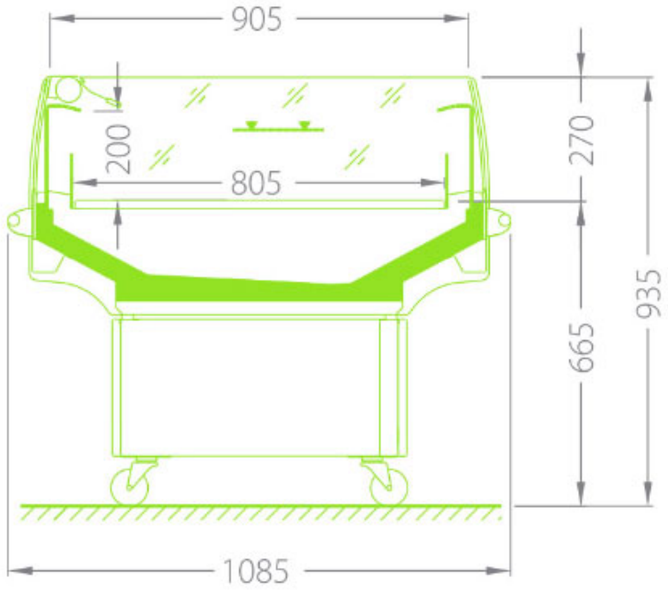

FRONTWALL AND
BACKWALL
SINGLE **GLASS**

MAINTENANCE FREE
CONDENSER

module 1.0

PLUG-IN Collection

JBG 2

MoreINFO

PROMOTION

Fidżi LSF-[module]-06

M0

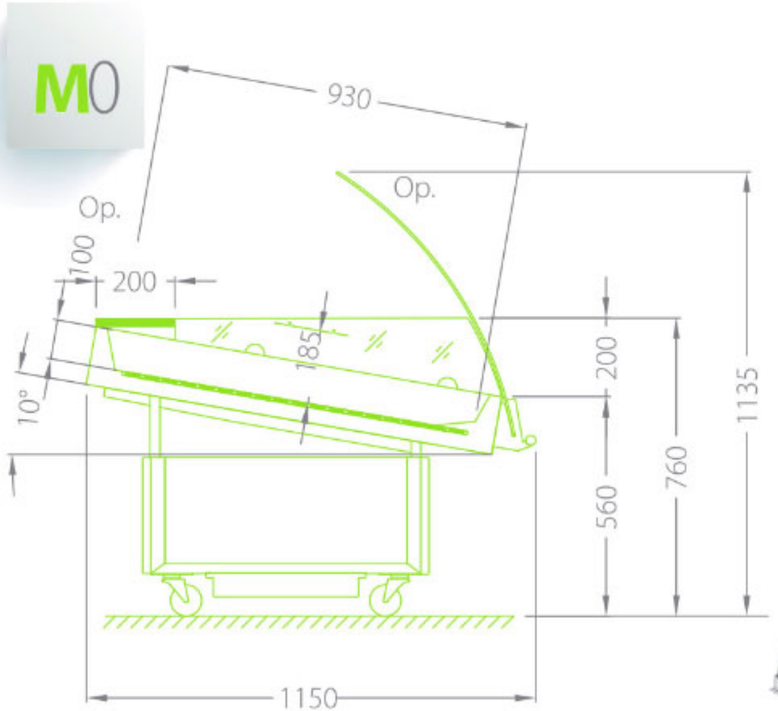

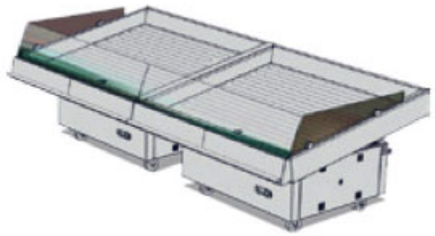

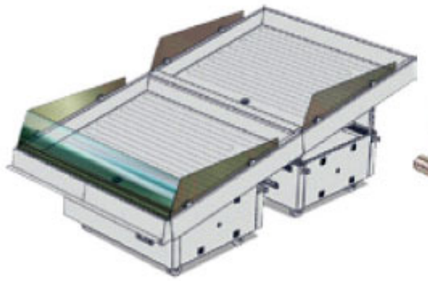

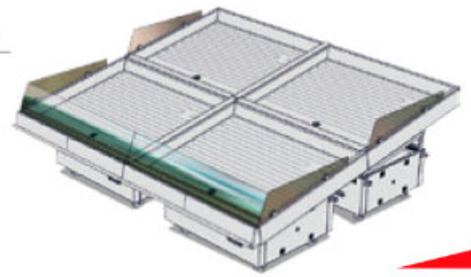

MAINTENANCE FREE **CONDENSER** AVAILABLE

SINGLE **GLASS** BENDED **TEMPERED**

SIDEWALLS **INTEGRATED**

module 1.25

PLUG-IN Collection

JBG 2

MoreINFO

Our **Improvements** For Your **Comfort,** Our **Solutions** For Your **Saving.**

energy savings fan

LED

LED available in option

low emission glass

maintenance free condenser available

SLIDING glass COVER

Nt / Lt

Possibility of CHANGING class TEMPERATURE

ISLANDS PLUGIN

ISLANDS

Pamir WDP-[module]-01

M1

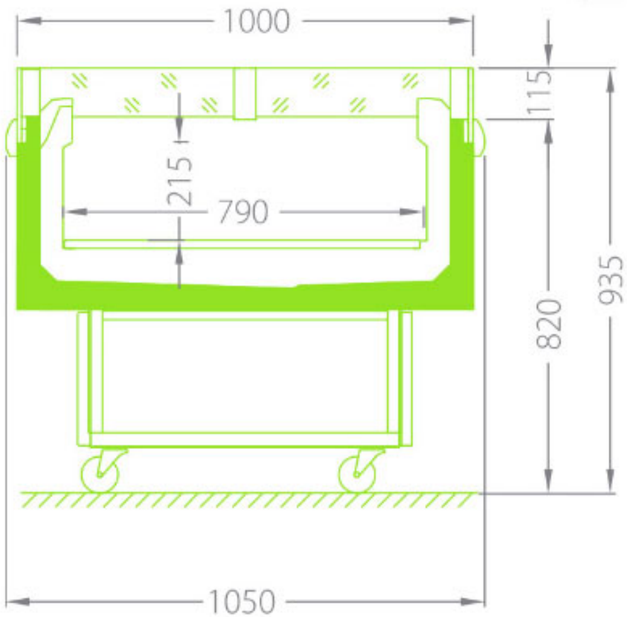

PLEXIGLASS INSTEAD
OF THERMOPANE
GLASS AROUND

LEDit IN OPTION

MAINTENANCE
FREE **CONDENSER**
AVAILABLE

modules 1.5 2.0

MoreINFO

PLUG-IN Collection JBG 2

ISLANDS

Pamir WDP-[module]-08

M1

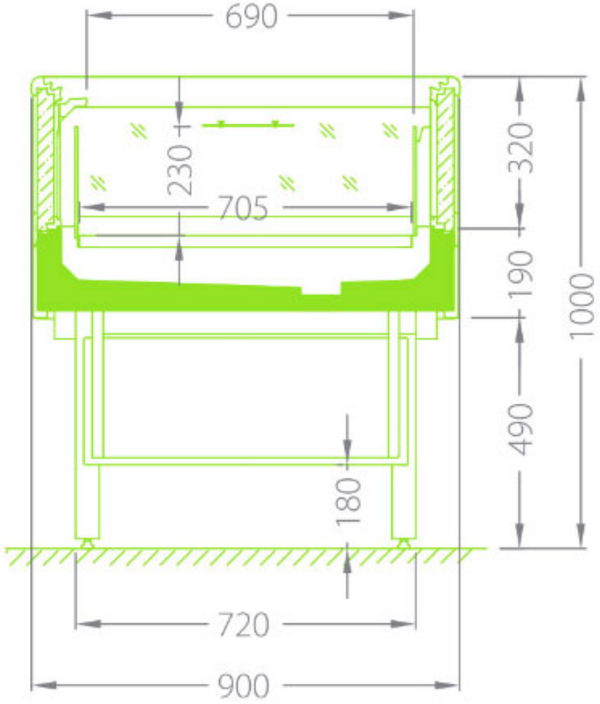

THERMOPANE GLASS

MAINTENANCE FREE CONDENSER AVAILABLE

module 1.35

PLUG-IN Collection

JBG 2

MoreINFO

ISLANDS

Pamir WNP-[module]-01

L1

* M1

* available

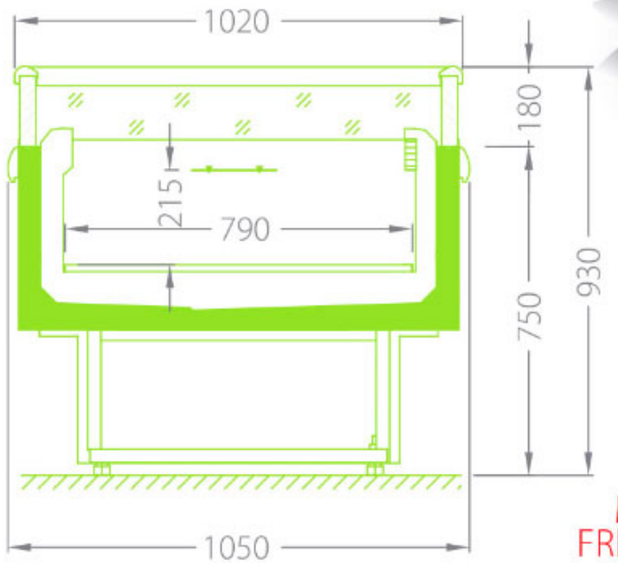

COVERS AVAILABLE

LEDit IN OPTION

MAINTENANCE FREE CONDENSER AVAILABLE

modules 1.5 2.0 2.5

MoreINFO

PLUG-IN Collection JBG 2

ISLANDS

Pamir WNP-[module]-04

L1

* M1

* available

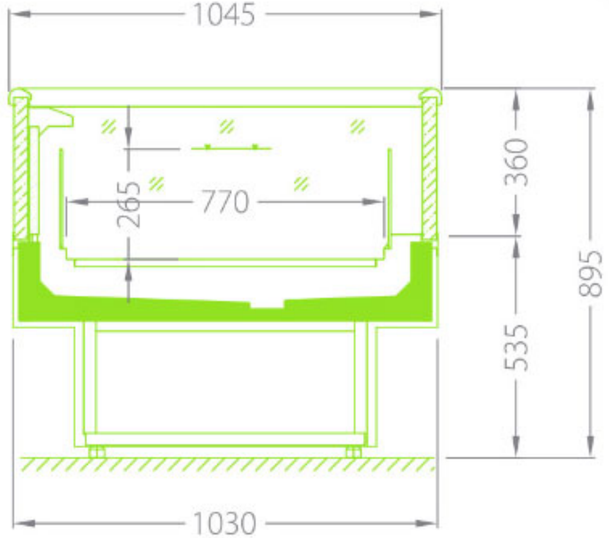

HOT GAS
DEFROSTING

COVERS AVAILABLE

MAINTENANCE
FREE **CONDENSER**
AVAILABLE

modules 1.2 1.5 2.0

MoreINFO

PLUG-IN Collection

JBG 2

ISLANDS

Pamir WNP-[module]-07

L1

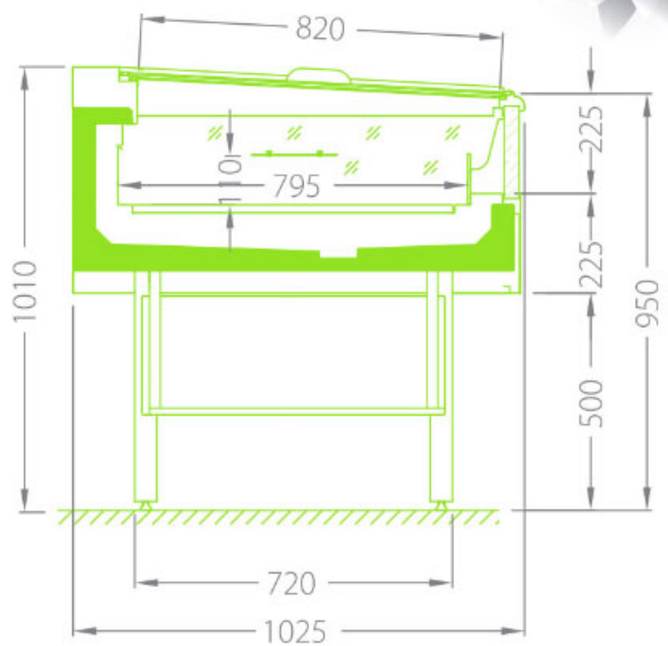

HOT GAS **DEFROSTING**

MAINTENANCE
FREE **CONDENSER**
AVAILABLE

module 1.2

PLUG-IN Collection

JBG 2

MoreINFO

ISLANDS

Dolomiti WMD-[module]-01/02

L1

M1

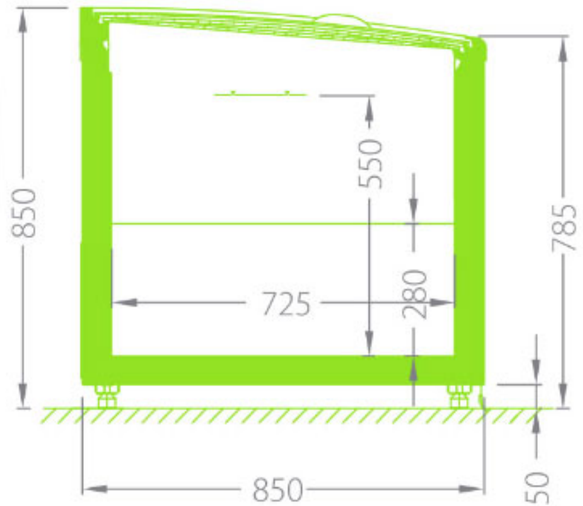

WMD-[module]-02

LED LIGHTING
HOT GAS **DEFROSTING**
VS COMPRESSOR, **LT/NT** VERSION
AS AN **OPTION**

WMD-[module]-01

NATURAL DEFROSTING

WMD-[module]-02

COVERS CURVED **SLIDING**
BOTTOM WIRE **GRIDS**

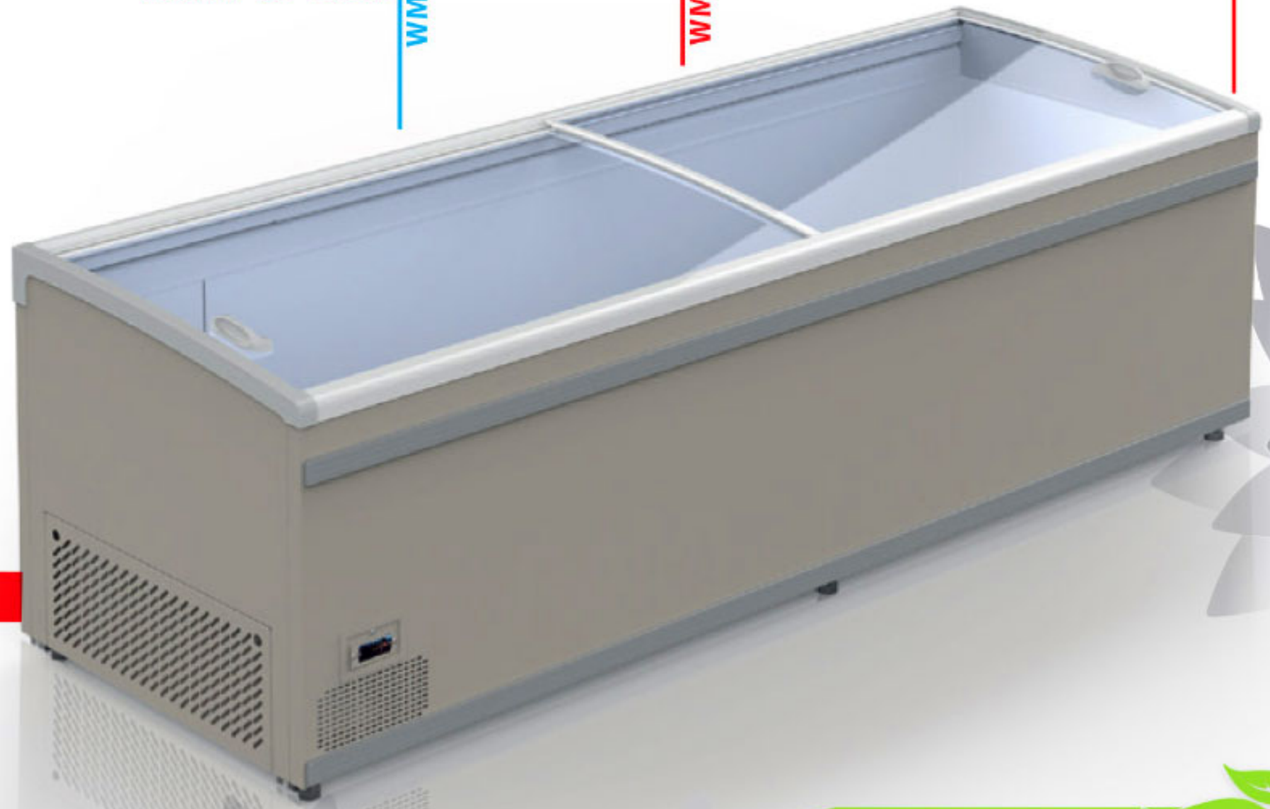

modules G1 1.85 2.1 2.5

MoreINFO

PLUG-IN Collection

JBG 2

Superstructure

Denali SND-[module]-02

modules 2.1 2.5

Superstructure gives you larger selling space without loosing store area.
With the same store space you can sell differentiated products.
Superstructure JBG-2 gives your client easier access to your assortment, and a chance to gather diverse assortment in one place.

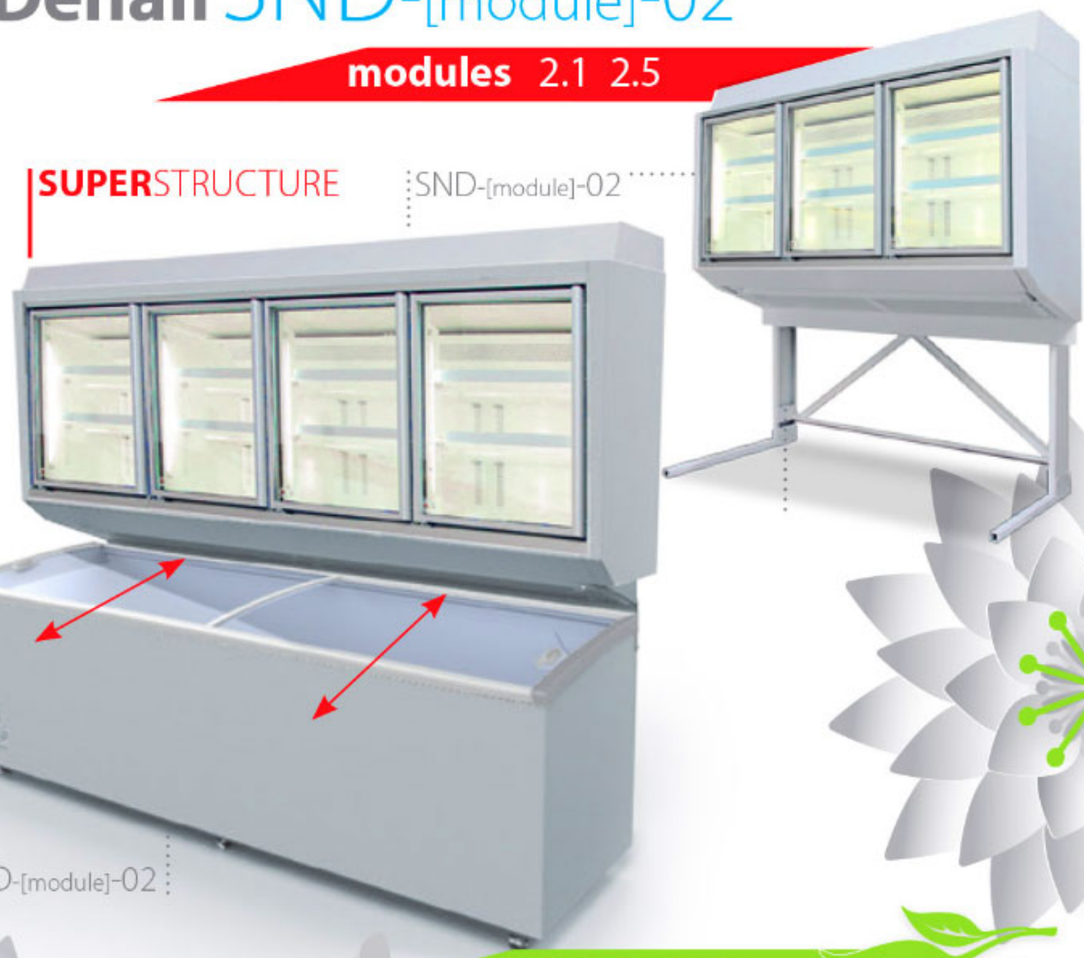

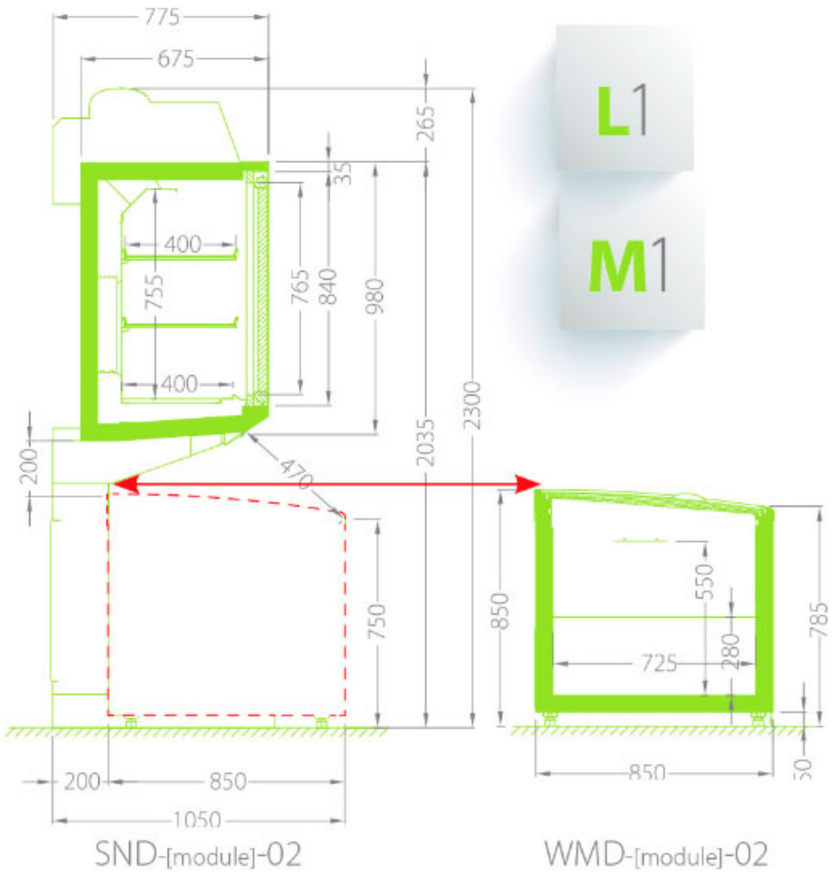

L1

M1

Denali **SND** Dolomiti **WMD**

The same store space

More selling area !

MoreINFO

PLUG-IN Collection

JBG 2

Our **Improvements** For Your **Comfort,** Our **Solutions** For Your **Saving.**

energy savings fan option

LED available in option

low emission glass

maintenance free condenser available

antifog doors available

CABINETS PLUGIN

CABINETS

Opal SNO/Topaz SDT-[module]-D1/G1/D2/G2

L1

M1

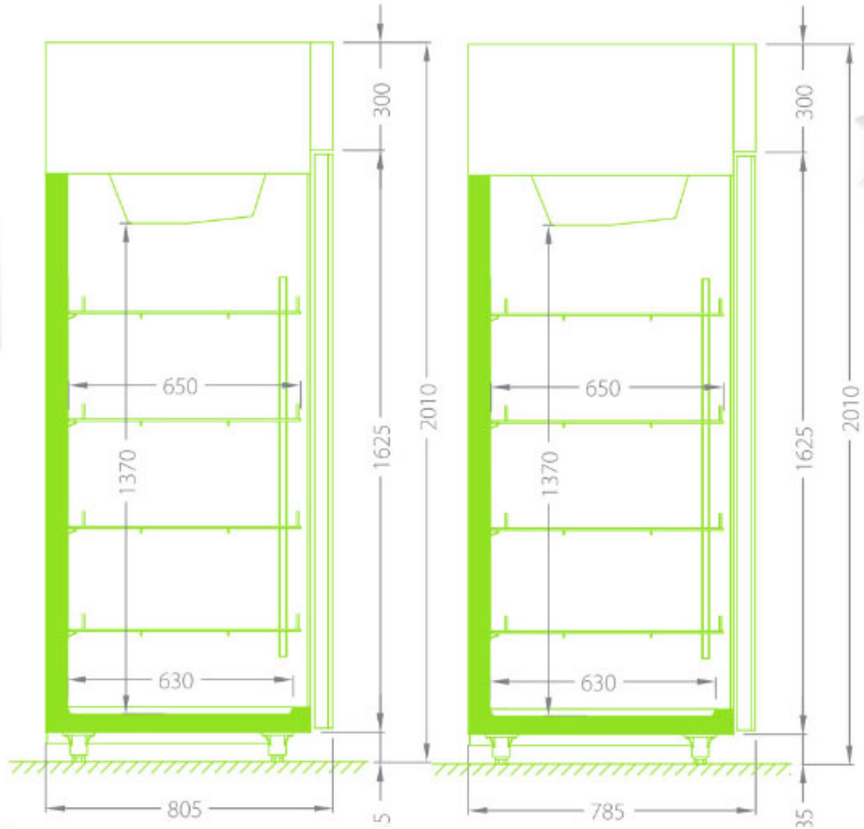

modules 0.75 1.45

MoreINFO

PLUG-IN Collection JBG 2

CABINETS

Forez SNF-[module]-G1/G2

Wetar SNW/SDW-[module]-L2/L3

LOW EMISSION **GLASS**

AUTOMATIC **CONDENSATE** EVAPORATION

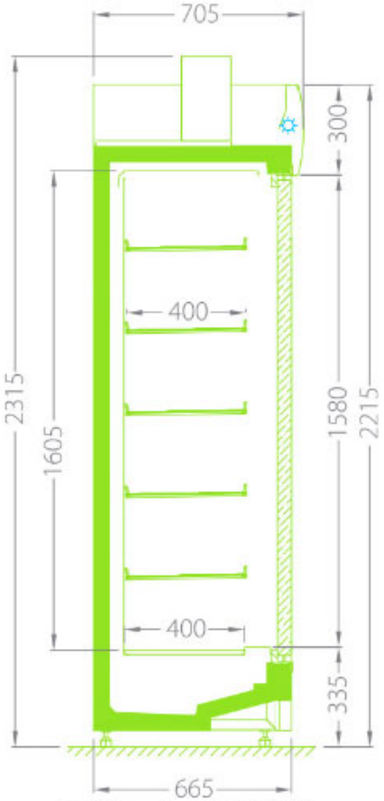

SNF-[module]-G1/G2

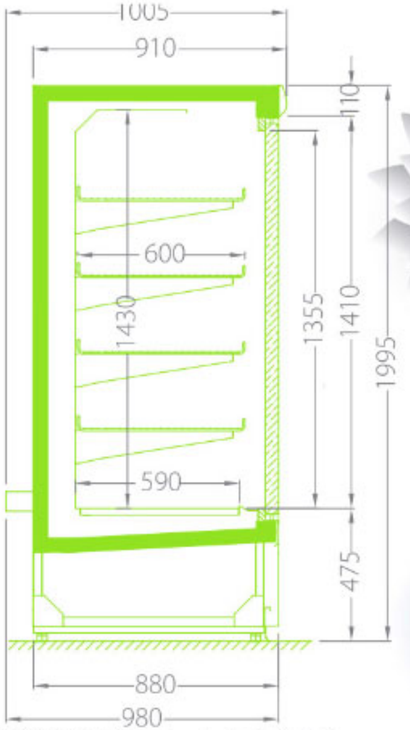

SNW/SDW-[module]-L2/L3

MoreINFO

MoreINFO

L2

modules 0.795 1.564

SNF-[module]-G1/G2

M1

L1

modules 1.564 2.342

SNW/SDW-[module]-L2/L3

PLUG-IN Collection

JBG 2

CABINETS

Weno MNW-[module]-01

L1

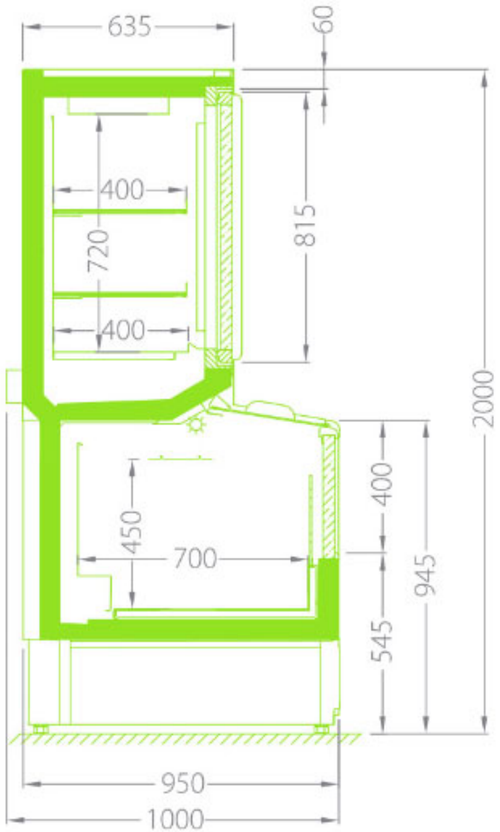

GOOD PRODUCT **VISIBILITY**
LOW EMISSION **GLASS**

MAINTENANCE
FREE CONDENSER
AVAILABLE

modules 1.25 1.875

PLUG-IN Collection

JBG 2

MoreINFO

MULTIDECKS

pp 8-16

RDM-[module]-10

RDM-[module]-15

RDM-[module]-16

RDM-[module]-17

RDM-[module]-18

RDK-[module]-11

RDK-[module]-15

RDT-[module]-L2

SEMI VERTICALS MULTIDECKS

pp 18

RDA-[module]-10/20

COUNTERS

pp 20-28

LDG-[module]-04

LDG-[module]-05

LDG-[module]-06

LDG-[module]-07

LDG-[module]-25

LDG-[module]-27

LNG-[module]-05

MDG-[module]-03

LGG-[module]-04

PASTRY LINE

pp 30-40

RDE-[module]-01

RDE-[module]-02

RDE-[module]-04

RDE-[module]-11

RDE-[module]-12

RDE-[module]-21

RDE-[module]-22

RDE-[module]-31

RGE-[module]-01

RGE-[module]-21/31

MDG-[module]-01/02

PROMOTION

pp 42-52

LDF-[module]-07/13

LDF-[module]-11

LDF-[module]-12

LDF-[module]-15

LDF-[module]-16

LDF-[module]-17

LDF-[module]-18

LDF-[module]-19

LDF-[module]-20

LDF-[module]-21

LSF-[module]-06

ISLANDS

pp 54-60

WDP-[module]-01

WDP-[module]-08

WNP-[module]-01

WNP-[module]-04

WNP-[module]-07

SND-[module]-02
WMD-[module]-01/02

CABINETS

pp 62-64

SNO/SDT-[module]-G1/D1/D2/G2

SNF-[module]-G1/G2
SNW/SDW-[module]-L2/L3

MNW-[module]-01

Domestic DEPARTMENT
handlowy@jbg2.com

+48 32 494 00 37
+48 32 494 00 69
+48 32 494 00 17

Fax +48 32 494 00 36

Export DEPARTMENT
export@jbg2.com

English/Russian speaker
+48 32 494 00 52
+48 32 494 00 54
+48 32 494 00 82
English/German speaker
+48 32 494 00 19
+48 32 494 00 53
+48 32 494 00 91
+48 32 494 00 85
English/French speaker
+48 32 494 00 43
+48 32 494 00 34
+48 32 494 00 64
English/Spanish speaker
+48 32 494 00 34
+48 32 494 00 55
English/Arabic speaker
+48 32 494 00 43
+48 32 494 00 34
English/Italian speaker
+48 32 494 00 43

Fax +48 32 494 00 36

© JBG-2, v.1.0, 01.2016

JBG 2

PLUG-IN COLLECTION

JBG-2 Sp. z o.o. ul. Gajowa 5 43-254 Warszowice **Poland**

www.jbg2**.com**